ORDER NO. AD9006192A4

Service Manual

COMPACT disc DIGITAL AUDIO

DIGITAL

Multi Compact Disc Player

SL-PC14

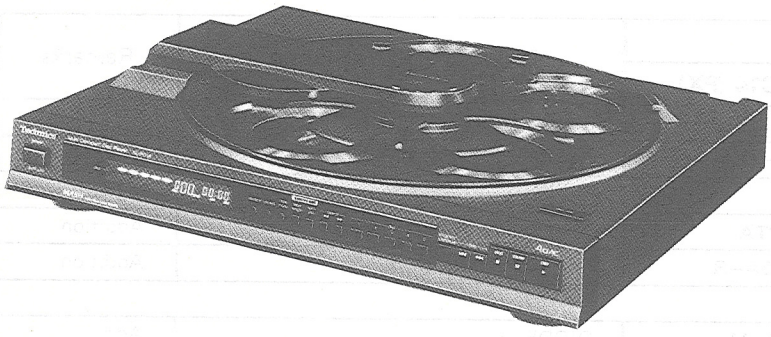

Color

(K)... Black Type

Area

Country Code	Area	Color
(PX)	Far East-PX.	(K)

Please file use this service manual together with the service manual for Model No. SL-PC25, Order No. AD9006180C9.

Notes: ★ Mentioned in this service manual are the differences from Model No. SL-PC25 for the destination (PX) area.
★ Please note the following major difference when servicing.
- This product is deleted with the remote sensor P.C.B. and remote control transmitter.

■ SPECIFICATIONS

(SL-PC25)

■ General	
Power supply	AC 50/60Hz, 110V/127V/220V/240V
Power consumption	13 W
Dimensions (W×H×D)	430×109.5×362 mm (16 15/16"×4 5/16"×14 1/4")
Weight	4.1 kg (9 lbs)

(SL-PC14)

■ General	
Power supply	AC 50/60Hz, 110V/127V/220V/240V
Power consumption	13 W
Dimensions (W×H×D)	430×85.5×362 mm (16 15/16"×3 6/16"×14 1/4")
Weight	3.3 kg (7.3 lbs)

Technics

Matsushita Electric Industrial Co., Ltd.
Central P.O. Box 288, Osaka 530-91, Japan

Panasonic Tokyo Sales Department
Matsushita Electric Industrial Co., Ltd.
World Trade Center Bldg., 4-1, Hamamatsu-cho, 2-chome, Minato-ku, Tokyo 105, Japan

CHANGES

CHANGE IN REPLACEMENT PARTS LIST

Notes: 1. Mentioned in this parts list are only those different from Model No. SL-PC25 (PX) all other parts are the same as for SL-PC25 (PX).
2. Important safety notice:
Components identified by ⚠ mark have special characteristics important for safety.
When replacing any of these components use only manufacturer's specified parts.

Ref. No.	Change of Parts No. SL-PC25 (PX)	→ SL-PC14 (PX)	Part Name & Description	Remarks
INTEGRATED CIRCUIT(S)				
IC601	HC-MD10E	———	I.C. REMOTE CONTROL RECEIVER	Deletion
TRANSISTOR(S)				
Q472	———	**UN4212TA**	TRANSISTOR	Addition
Q473	———	**2SA1309A–R**	TRANSISTOR	Addition
DIODE(S)				
D473	———	**MA4091–M**	DIODE	Addition
D474	———	**1SS254TA**	DIODE	Addition
COIL(S)				
L473	———	**RLQZP3R3KT–Y**	COIL	Addition
CONNECTOR(S)				
CN401	SJSD0305	———	CONNECTOR (3P)	Deletion
CABLE(S)				
FC401	REZ0222	———	FLAT CABLE	Deletion
JACK(S)				
JK401	———	**RJJ33TR01**	REMOTE CONTROL	Addition
RESISTORS				
R474	———	**ERDS2TJ103**	RESISTOR, 1/4W 10K	Addition
R475	———	**ERDS2TJ562**	RESISTOR, 1/4W 5.6K	Addition
R476	———	**ERDS2TJ272T**	RESISTOR, 1/4W 2.7K	Addition
R477	———	**ERDS2TJ100**	RESISTOR, 1/4W 10	Addition
CABINET AND CHASSIS				
1	RKC0002	———	HINGE	Deletion
3	RGK0060	———	FOOT	Deletion
4	RFKKLPC25PXK	**RFKKLPC14PXK**	CABINET ASS'Y	Change
29	SHRD170	———	COVER, REMOTE CONTROL SENSOR	Deletion
30	RYF0082	———	DUST COVER	Deletion
31	RMG0146	———	RUBBER CUSHION	Deletion
PACKING MATERIAL				
P1	RPG0491	**RPG0743**	PACKING CASE	Change
P2	RPN0338A	**RPN0146A**	PAD (FRONT)	Change
P3	RPN0338B	**RPN0146B**	PAD (BACK)	Change
P7	RPF0024	———	PROTECTION BAG (DUST COVER)	Deletion
ACCESSORIES				
A1	RQT0502–P	**RQT0498–P**	INSTRUCTION MANUAL	Change
A2	SQX7071–1	———	WARRANTY CARD	Deletion
A5	EUR64789B	———	REMOTE CONTROL TRANSMITTER	Deletion
A6	UR64EC804	———	BATTERY COVER	Deletion
A8	RYF0082	———	DUST COVER	Deletion
A10	———	**SJP2257T**	L-TYPE CABLE	Addition

SCHEMATIC DIAGRAM

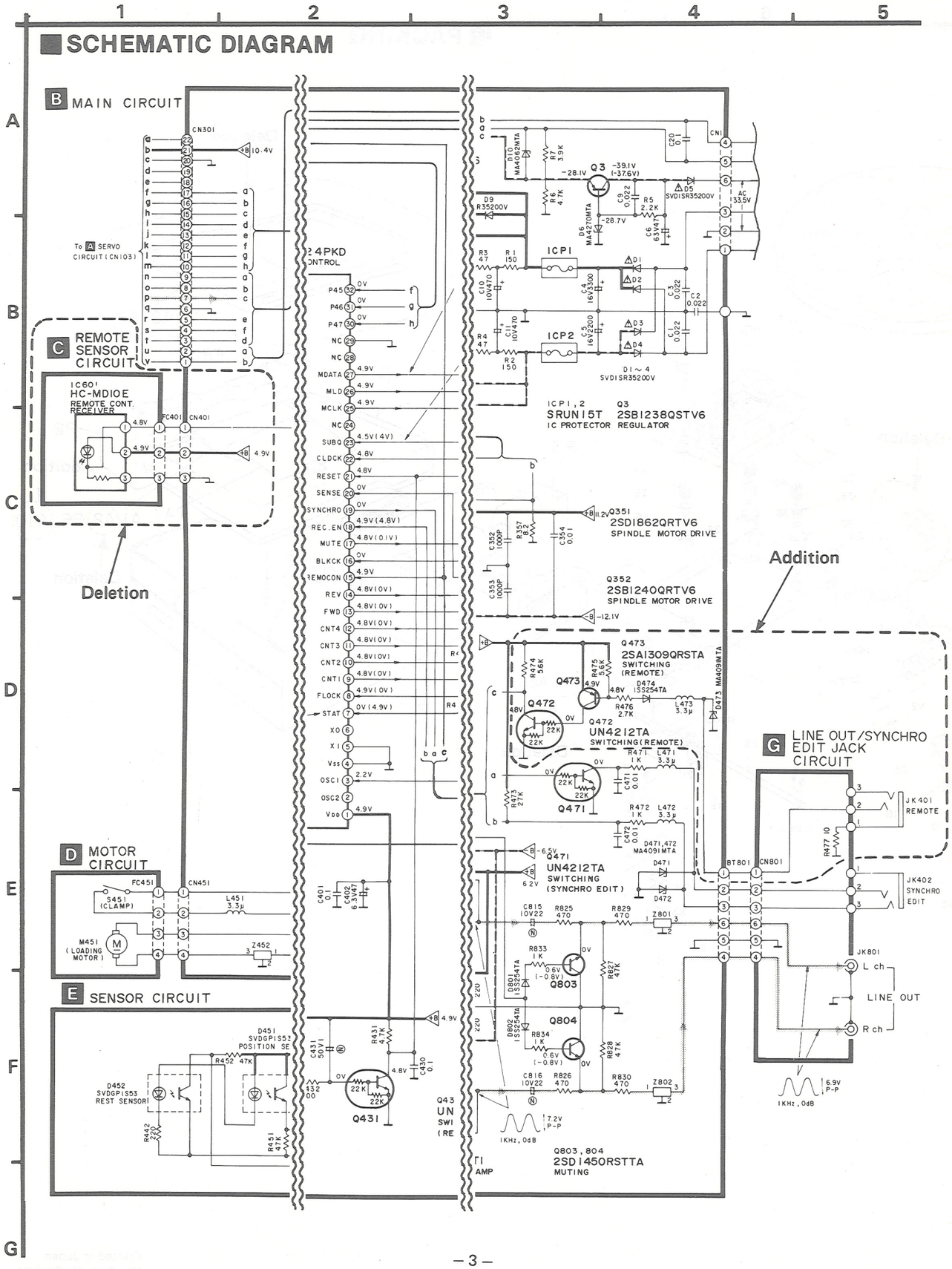

PRINTED CIRCUIT BOARDS

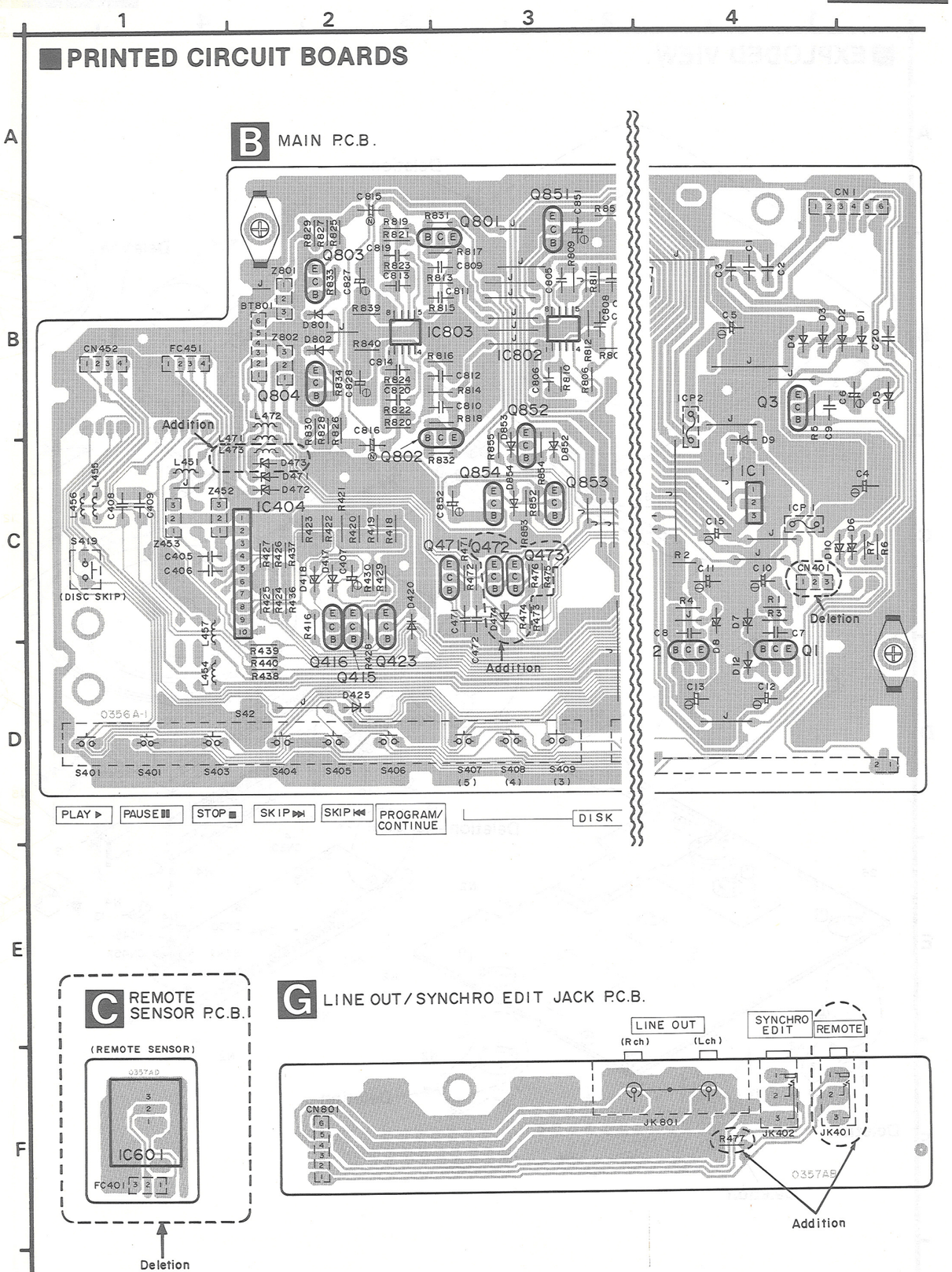

EXPLODED VIEW

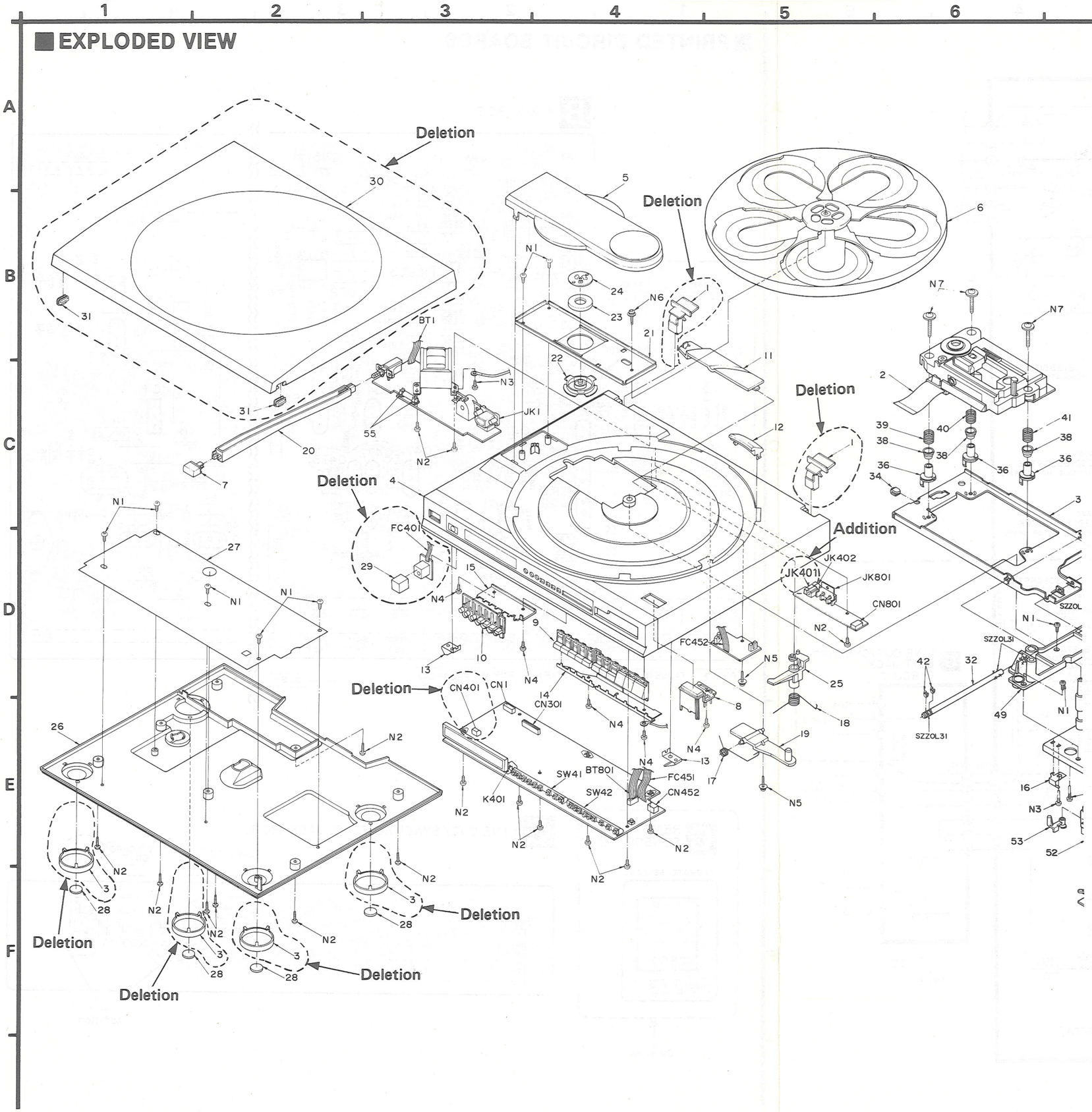

PACKING

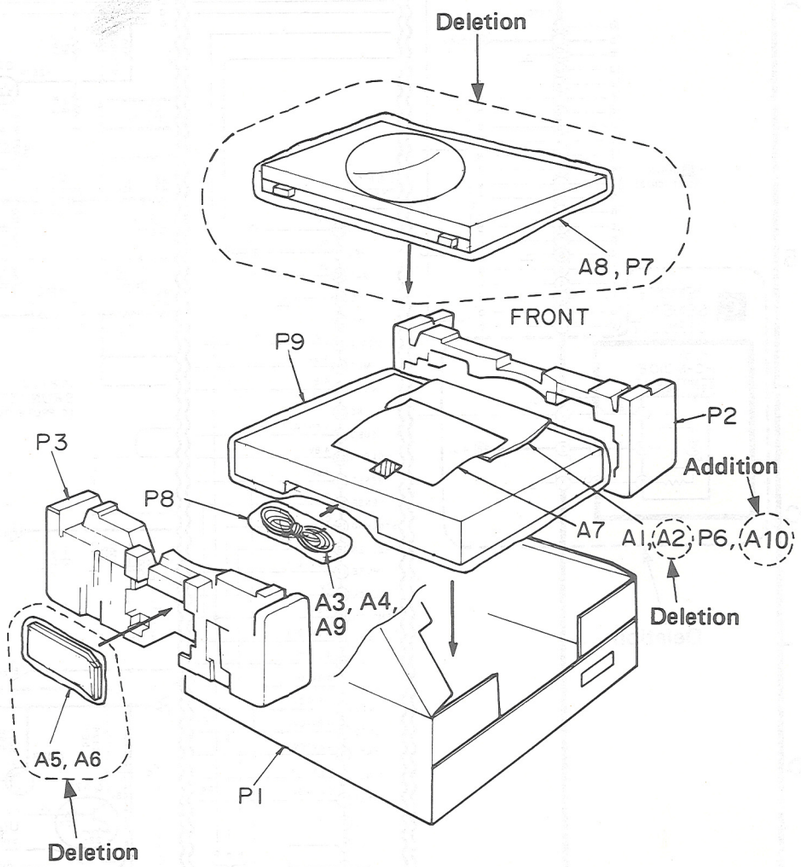

Printed in Japan
K900600830TN/YY

ORDER NO. AD9006180C9

Service Manual

Multi Compact Disc Player

SL-PC25

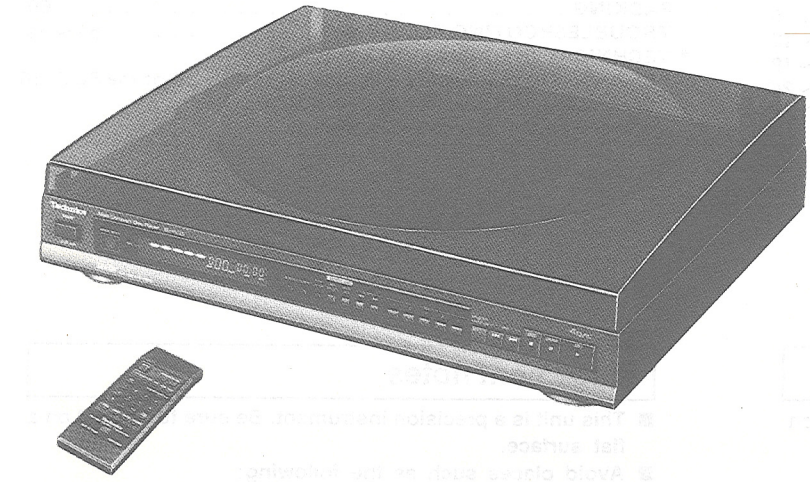

Color

(K)... Black Type

Area

Country Code	Area	Color
(E)	Continental Europe.	(K)
(EB)	Great Britain.	
(GC)	Asia, Latin America, Middle Near East and Africa.	
(GN)	Oceania.	
(PX)	Far East-PX.	

SL-PC10 MECHANISM SERIES (RXK0087)

SPECIFICATIONS

■ Audio

No. of channels	2 (left and right, stereo)
Frequency response	2–20,000 Hz±1 dB
Output voltage	2 V (at 0 dB)
Dynamic range	96 dB
S/N ratio	96 dB
Total harmonic distortion	0.005% (1 kHz, 0 dB)
Wow and flutter	Below measurable limit
DA converter	MASH* (4 DAC)
Output impedance	1 kΩ
Load impedance	More than 10 kΩ

***MASH**

- MASH (Multi-Stage Noise Shaping) is an effective oversampling D/A conversion technique which realizes a high S/N ratio and needs no highly complex manufacturing processes such as a laser trimming.
- MASH is trademark of NTT (Nippon Telegraph and Telephone Corporation).

■ Pickup

Wavelength	780 nm

■ General

Power supply	
For Continental Europe:	AC 50/60 Hz, 220 V
For Great Britain and Oceania:	AC 50/60 Hz, 240 V
For others:	AC 50/60 Hz, 110 V/127 V/220 V/240 V
Power consumption	13 W
Dimensions (W×H×D)	430×109.5×362 mm
Weight	4.1 kg

Specifications are subject to change without notice.
Weight and dimensions shown are approximate.

Technics

Matsushita Electric Industrial Co., Ltd.
Central P.O. Box 288, Osaka 530-91, Japan

Panasonic Tokyo Sales Department
Matsushita Electric Industrial Co., Ltd.
World Trade Center Bldg., 4-1, Hamamatsu-cho, 2-chome, Minato-ku, Tokyo 105, Japan

CONTENTS

	Page
INSTALLATION	2
ACCESSORIES	2
PRECAUTION OF LASER DIODE	3
CONNECTIONS	4
FRONT PANEL CONTROLS AND FUNCTIONS	5
PLAYING A DISC	6, 7
REMOTE CONTROL TRANSMITTER	7
HANDLING PRECAUTIONS FOR OPTICAL PICKUP	8
INSTRUCTIONS FOR TRAVERSE OIL (Part No. SZZ0L31)	8
DISASSEMBLY INSTRUCTIONS	9～13
MEASUREMENTS AND ADJUSTMENTS	13～19
TERMINAL FUNCTION OF IC'S	20～24
BLOCK DIAGRAM	25～27
INTERNAL CONNECTION OF FL	28
SCHEMATIC DIAGRAM	29～35
TERMINAL GUIDE OF IC'S TRANSISTORS AND DIODES	36
PRINTED CIRCUIT BOARDS	37～40
WIRING CONNECTION DIAGRAM	41
REPLACEMENT PARTS LIST	42～45
EXPLODED VIEWS	46～48
RESISTORS & CAPACITORS	49, 50
PACKING	50
TROUBLESHOOTING FLOW CHART	51～54
* TECHNICAL INFORMATION	

* This technical information is located on pp 45～56 of the SL-PC10 Service Manual (Order No. AD8904091C1). Therefore, refer to that Service Manual.

INSTALLATION

Transport lock

The optical pickup is secured to prevent damage during transport. Be sure to release it before use.

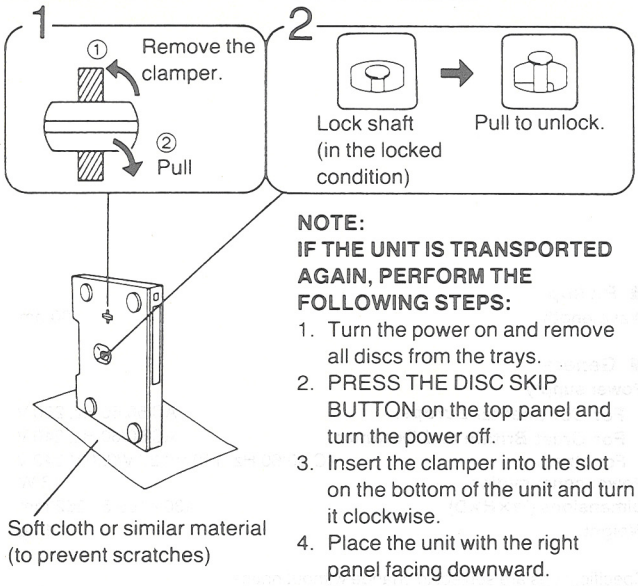

NOTE:
IF THE UNIT IS TRANSPORTED AGAIN, PERFORM THE FOLLOWING STEPS:

1. Turn the power on and remove all discs from the trays.
2. PRESS THE DISC SKIP BUTTON on the top panel and turn the power off.
3. Insert the clamper into the slot on the bottom of the unit and turn it clockwise.
4. Place the unit with the right panel facing downward. Press the lock shaft to the LOCK position (■ → ■).

CAUTION:
Do not transport the unit without locking the lock shaft.
SEVERE DAMAGE WILL RESULT.

Placement notes

■ **This unit is a precision instrument. Be sure to place it on a flat surface.**

■ **Avoid places such as the following:**

- Near any equipment or device that generates strong magnetism.
- On any heat-generating equipment or device, or in any place where the temperature is high (35°C or higher).
- Extremely cold places (5°C or below).
- Near a tuner or TV (It may cause noise in the broadcast, or disturbance of the TV picture.)
- For long periods of time in direct sunlight.
- In dusty or smoky locations.
- In locations prone to vibrations.
- In locations where the rear panel is less than 10 cm (about 4") away from the wall or back of an audio rack.
- Within reach of children.

■ **When carrying or storing the unit, handle it with care so it is not subjected to any strong bumps.**
Always remove the disc before storing the unit for any period of time.

■ **To avoid problems due to vibration.**

- Do not place a book or similar object under this unit.
- Do not route the connection cables (of this or other units) across the operation panel, across the top, or under the unit.

ACCESSORIES

- AC power supply cord 1
  [SJA187 (E)
  SJA193 (EB)
  SJA173 (GN)
  RJA0004 (GC, PX)]
- Stereo connection cable 1
  (SJP2249–3)
- Dust cover 1
  (RYF0082)
- Remote control transmitter 1
  (EUR64789B)
- Batteries 2
  (UM–4NE/2S)
- AC plug adaptor 1
  [SJP9215 (GC, PX)]

PRECAUTION OF LASER DIODE

CAUTION: This product utilizes a laser diode with the unit turned "on", invisible laser radiation is emitted from the pick up lens.
Wave length: 780nM
Maximum output radiation power from pick up: 100μW/VDE

Laser radiation from the pick up lens is safety level, but be sure the followings:

1. Do not disassemble the optical pick up unit, since radiation from exposed laser diode is dangerous.
2. Do not adjust the variable resistor on the pickup unit. It was already adjusted.
3. Do not look at the focus lens using optical instruments.
4. Recommend not to look at pick up lens for a long time.

ACHTUNG: Dieses produkt enthält eine laserdiode. Im eingeschalteten zustand wird unsichtbare laserstrahlung von der lasereinheit abgestrahlt.

Wellenlänge: 780nM
Maximale strahlungsleistung der lasereinheit: 100μW/VDE

Die strahlung an der lasereinheit ist ungefährlich, wenn folgende punkte beachtet werden:

1. Die lasereinheit nicht zerlegen, da die strahlung an der freigelegten laserdiode gefähriich ist.
2. Den werksseitig justierten einstellregler der lasereinreit nicht verstellen.
3. Nicht mit optischen instrumenten in die fokussierlinse blicken.
4. Nicht über längere zeit in die fokussierlinse blicken.

ADVARSEL: I dette a apparat anvendes laser.

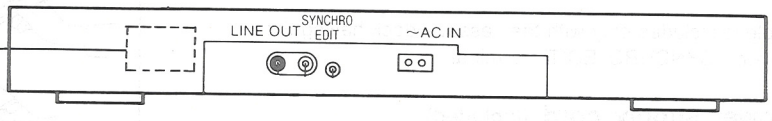

Rear panel of this unit

SQWD7

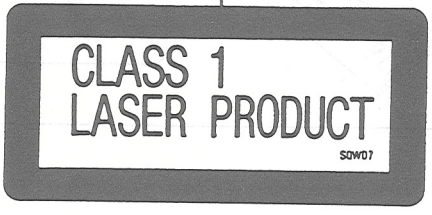

Obs:
Apparaten innehåller laser
Komponent av höger laserklass
än klass 1.

• Use of caution labels

Note: ○ Mark is used, × Mark is not used.

Areas	SQWD7	RQLS0021
(PX)	×	×
Others	○	○

RQLS0021

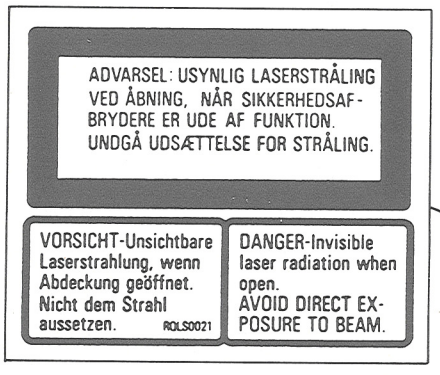

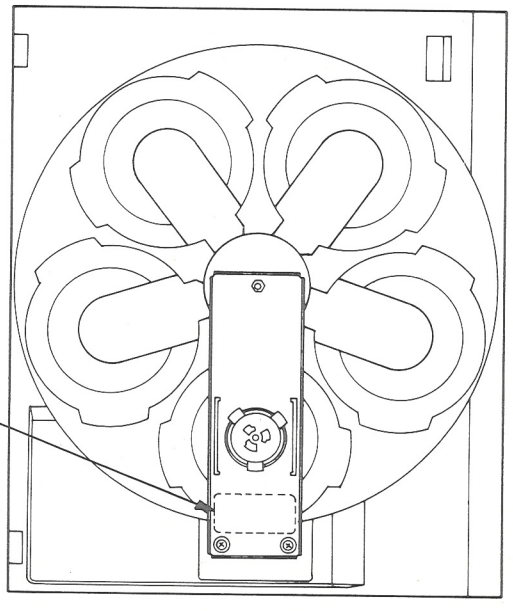

CONNECTIONS

●Before making connections, be sure that the power to this unit and all other connected equipment is first turned off.

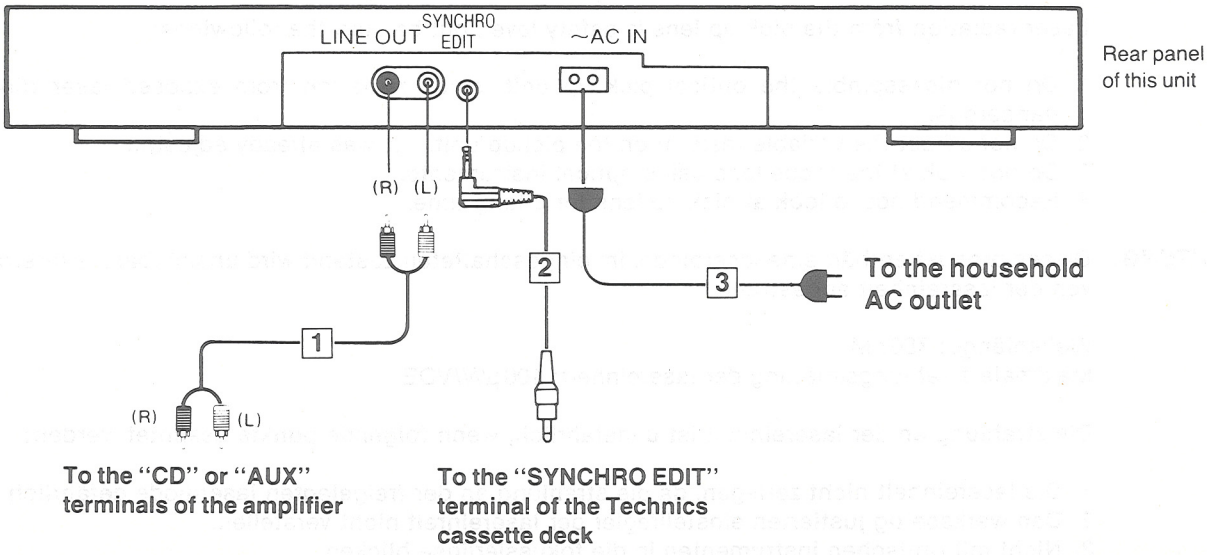

1 Stereo connection cable (included)

2 L-type cable

Note:
This cable is included only with the cassette deck having the appropriate "SYNCHRO EDIT" terminal.

3 AC power supply cord (included)

Note:
The configuration of the AC outlet and AC power supply cord differs according to area.

How to install the dust cover.

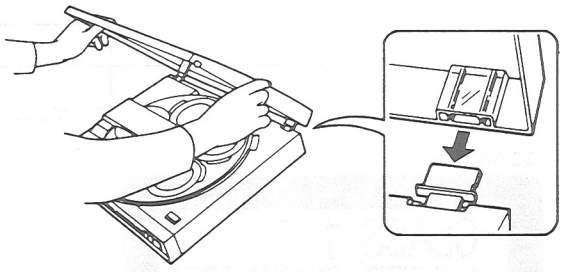

FRONT PANEL CONTROLS AND FUNCTIONS

Control section

The functions indicated by the numbers with black background (❸) can also be activated from the remote control transmitter. (See page 7.)

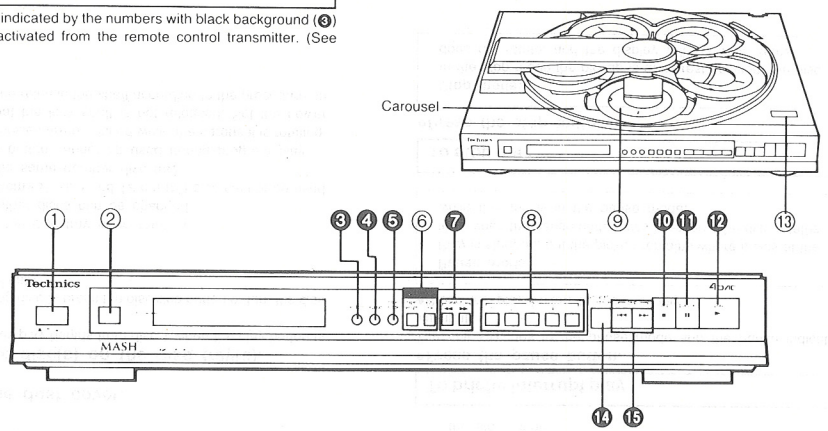

① **Power switch (power)**
Press (■ → ■) to switch the power on.
Press again (■ → ■) to switch the power off.

② **Remote control signal sensor (remote sensor)**

❸ **Random button (random)**
Press this button to let the microcomputer make a random selection of the sequence in which discs and tracks are played during continuous play or program play.
Press the button again to cancel the random play mode.

❹ **Repeat button (repeat)**
Press this button to activate the repeat mode. The repeat indicator illuminates.
Press again to cancel the repeat mode. The repeat indicator will no longer illuminate.

❺ **Time mode button (time mode)**
Use this button to select the desired time mode. The display information will change as follows each time the button is pressed.
① Track number and its elapsed play time.
② Track number and remaining time of current track.
③ Total track numbers and playing time of the current disc.
④ Total elapsed play time of the current disc.

⑥ **Buttons for edit function (synchro edit)**
- **Edit tape length button (tape length)**
  When compact discs are to be recorded to tape, this button can be used to calculate the number of tracks that can be recorded on each side of the tape, depending on the length of the cassette tape used, so that as little tape as possible is wasted.
- **Auto link button (auto link)**
  This button can be used for automatic edit recording from several discs.

❼ **Search buttons (◀◀ search ▶▶)**
Use these buttons to move the pickup forward and backward.

⑧ **Disc button (disc 1~5)**
These buttons are used to select the desired disc for sequential or program play.

⑨ **Disc trays (1~5)**
One disc per tray can be loaded.

❿ **Stop button (■ stop)**

⓫ **Pause button (❚❚ pause)**

⓬ **Play button (▶ play)**

⑬ **Disc skip button (disc skip)**
Each time this button is pressed, the carousel will rotate in a clockwise direction to the next tray position. This allows for loading or unloading of discs.
This button is also used to select the next disc, in the continuous or random play mode.

⓮ **Program/continue button (program/continue)**
This button is used to select either the continuous play or program play mode.
The mode changes each time the button is pressed.
The continuous play mode is automatically selected when the power is switched on.

⓯ **Skip buttons (|◀◀ skip ▶▶|)**
Press one of these buttons briefly to move the pickup (backward and forward) to the beginning of a specific track.

> **Pickup:**
> The pickup is a laser device that reads the information on the disc surface. The pickup moves across the disc as the disc is played, but it is not visible from outside the cabinet.

Display section

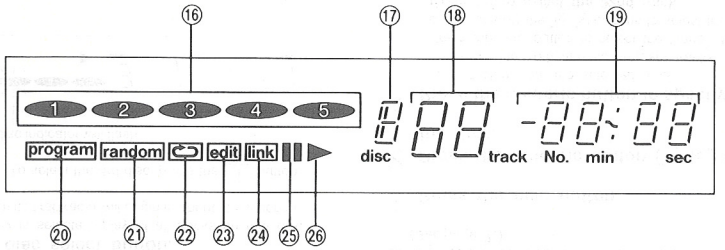

⑯ **Disc indicators (1 ~ 5)**
The indicator corresponding to the disc being played flashes during play.
When the unit is in the program mode, these indicators show the programmed discs.

⑰ **Disc number/tape side display (disc)**
Shows the number (1~5) of the current disc, or shows the tape side (A or B) in the edit mode.

⑱ **Track number display (track)**
Shows the number (up to 99) of the current track.

⑲ **Time/programmed number display (No., min, sec)**
This display shows the elapsed playing time of the track being played. When the unit is in the program play mode, this display shows the program sequence.

⑳ **Program play indicator (program)**
Illuminates when the unit is in the programming or program play mode.

㉑ **Random indicator (random)**
Illuminates when the random play mode is selected.

㉒ **Repeat indicator (⟲)**
Illuminates when the repeat mode is activated.

㉓ **Compact disc edit indicator (edit)**
Illuminates when the edit mode is activated.

㉔ **Auto link indicator (link)**
Illuminates when the unit is in the condition that the automatic disc link is possible.

㉕ **Pause indicator (❚❚)**
Illuminates when the pause mode is activated.

㉖ **Play indicator (▶)**
Illuminates when the play mode is activated.

PLAYING A DISC

Continuous play (from the stop mode)

Continuous play refers to play of the first track of the first disc to the last track of the last disc.

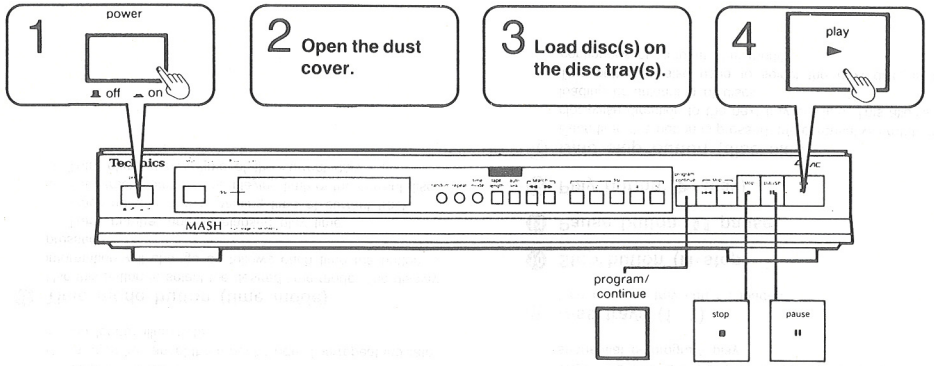

1 Press the power switch to turn on (▙▁▁▁).
The disc trays turn clockwise, and the disc 1 tray resets to the front position.
- Continuous play is automatically selected when the power is switched on. If the program play indicator is illuminated, press the program/continue button.

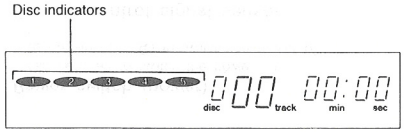

2 Open the dust cover.

3 Load the disc(s) on the disc tray(s).
- Continuous play begins from disc 1 when the play button is pressed.
- For loading disc 5, press the disc skip button or turn the disc trays manually.

Notes:
- Do not touch the disc tray while rotating.
- During play, other discs can be changed.
- Discs of the 8 cm (3") size and 12 cm (5") size cannot be used together on the same number disc tray.
- The disc skip button cannot be used during program play.
- If intermittent noises are produced while the carousel is rotating, this means that the lock shaft is not released. Set the power switch to off and release the shaft according to the procedure on page 2.

4 Press the play button to start play.
The play indicator will illuminate and continuous play will start.

The indicator corresponding to the disc being played flashes.

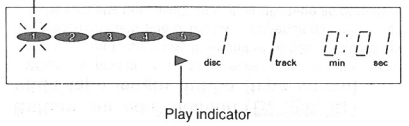

At the end of the last track of the last disc, the unit switches to the stop mode.

To briefly interrupt play

- **Press the pause button.**

The unit switches to the pause mode and the pause indicator illuminates.
- Press the play button to resume play.

> **Pause mode:**
> Play is stopped, but the pickup remains where it was at the time when the pause button was pressed. The disc rotates while the unit is in the pause mode.

To stop play

- **Press the stop button.**

> **Stop mode:**
> In the stop mode the pickup is at its rest position; the disc does not rotate, and the display will show all zeros.

Continuous play (continued)

To select the desired track (or disc) to be played (from the stop mode or during play)

By selecting the disc or track to be played first in the play sequence, all subsequent tracks will be played on that disc(s) in order from that track to last. (There is no need to press the play button.)

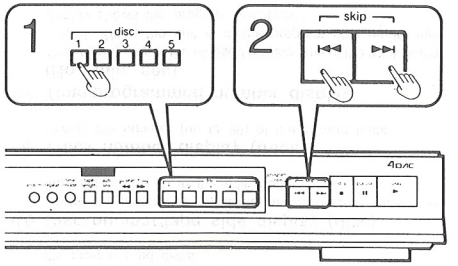

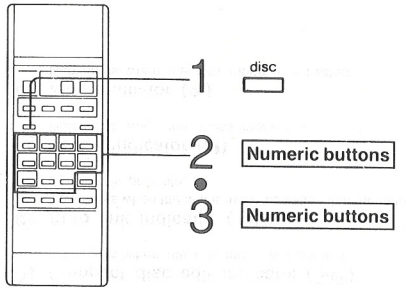

1 Press the disc select button.
If the disc only is selected, play of all tracks on that disc (beginning from its first track) will begin in about ten seconds.

For example: To select the 3rd disc, press the [3] button.

The selected disc indicator will flash.

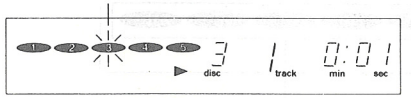

2 Press the skip ([▶▶|]) button to select the track number.
Play will start from the selected track.

For example: To select the 9th track, press the [▶▶|] button 8 times (or keep pressing the button until the display shows " 9 ").

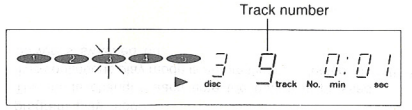

If you go past the desired track, press the [|◀◀] button to return to the desired track.

By the remote control transmitter
(See page 7.)

1 Press the disc button.

2 Press the numeric button ([1]–[5]) to specify the disc.

3 Press the numeric button to specify the track.
Play will start from the selected track.
- To select the 10th and subsequent tracks:
  Press the [+10] button to select the "tens" digit, and then press (one of) the [0]–[9] buttons to select the "units" digit.
  Example: to select the 32nd track
  Press the [+10] button three times to select 3, and then press the [2] button.
- Steps 1 and 2 are not necessary if the track is specified on the 1st disc.

Notes:
- If a disc number not on the disc tray is specified, the next higher number disc will be played.
- When a track number not on the disc is specified, the selection cannot be entered.

Program play (from the stop mode)

As many as 32 selections from the five discs can be selected and programmed to play in any desired sequence.

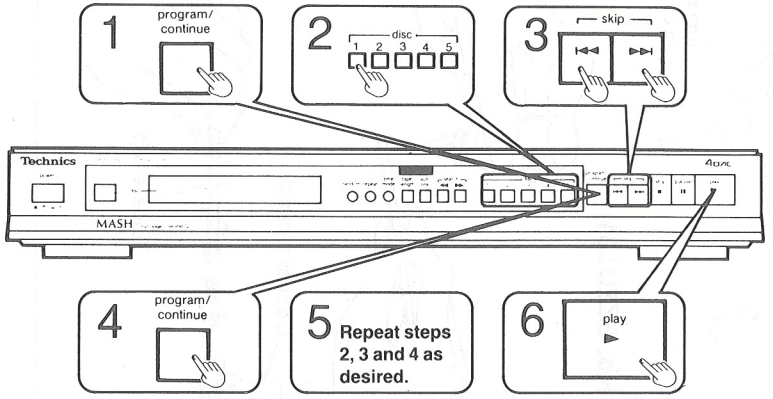

1 Press the program/continue button.
The play mode will then change from continuous play to program play.

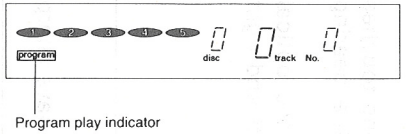

Program play indicator

Note:
The mode does not change if the program/continue button is pressed during play.

2 Press the disc select button.

For example: To select the 3rd disc, press the [3] button.

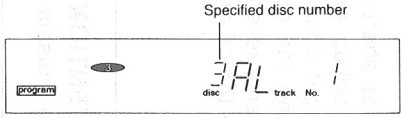

Note:
If the disc only is selected, all tracks on that disc (beginning from its first track) will be programmed.

3 Select the track number.

For example: To select the 9th track, press the [▶▶|] button 9 times.

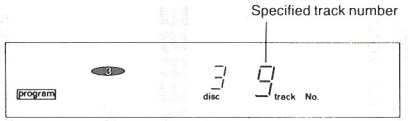

4 Press the program/continue button.

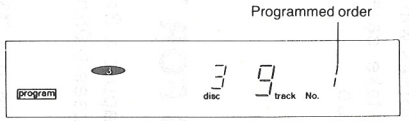

5 Repeat steps 2, 3 and 4 until the desired program is completed.
- Steps 3 and 4 are not necessary if selecting the disc only.
- Step 2 is not necessary to select the disc number if the next track selected is on the same disc.

Note:
If selections of non-existing disc(s) or track(s) are programmed, the corresponding indicator (disc or track) will illuminate and the selection will be included in the program count. However, during play the selection(s) will be cancelled and the subsequent program selection will be played.

6 Press the play button to start play.

REMOTE CONTROL TRANSMITTER

Insertion of remote control transmitter batteries

BATTERY LIFE: About 1 year.

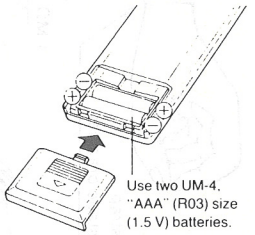

Notes concerning use of dry batteries
- Do not use re-chargeable batteries (Ni-Cd type).
- Be sure the batteries are inserted so that the positive (+) and negative (−) polarities are correct. Batteries installed with incorrect polarities may leak and damage the remote control transmitter.
- Never subject the batteries to excessive heat or flame; do not attempt to disassemble them; and be sure they are not short-circuited.
- If the remote control transmitter is not to be used for a long time, remove the batteries and store them in a cool dark place.
- Always remove old, weak or worn-out batteries promptly and dispose of them.
- Never mix old and new batteries, nor batteries of different types (carbon or alkaline).
- Although battery life varies depending on how often the remote control transmitter is used, the batteries should be replaced about once every year on the average.
- The batteries should also be replaced if commands from the remote control transmitter are not received by this player even when the transmitter is held close to the player's front panel.
- If the batteries leak, clean the battery holder well before inserting new batteries.
- Do not use remote control transmitter for TV sets, VTRs or other components at the same time as this player's remote control transmitter since this could result in a mistaken operation.

Remote control transmitter operation notes

Note that operation may not be correct if direct sunlight or other strong light strikes the remote control signal receptor part of this unit. If there is a problem, place the unit away from the direct sunlight or other strong light source.

Face it toward the remote control signal receptor.

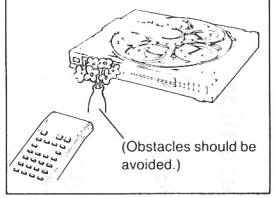

Use the remote control transmitter within 6 meters.

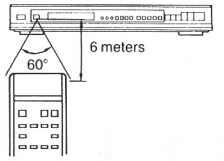

Be sure the transmitter part of the remote control transmitter and the receptor part of this unit are free from dust. Excessive dust might prevent reception.

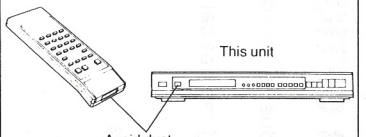

Note: The control panel of the remote control transmitter may be covered by a clear plastic protective sheet. This sheet may be removed if desired.

Remote functions

Ⓡ On the remote control transmitter only.

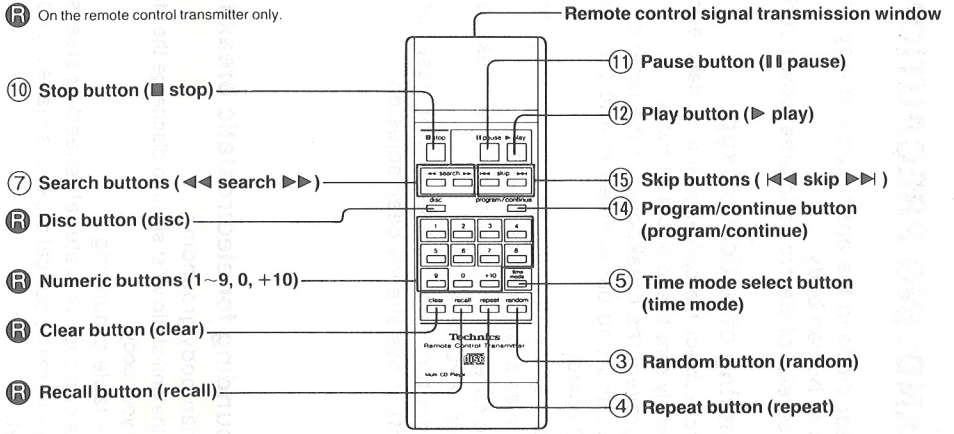

HANDLING PRECAUTIONS FOR OPTICAL PICKUP

The laser diode in the optical pickup may break down due to potential difference caused by static electricity of clothes or human body.
So, be careful of electrostatic breakdown during repair of the optical pickup.

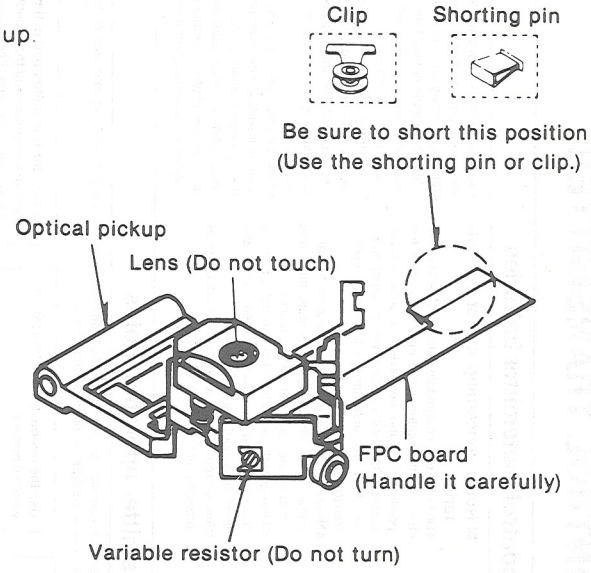

• Handling of optical pickup

1. Do not subject the optical pickup to static electricity as it is extremely sensitive to electrical shock.
2. To prevent the breakdown of the laser diode, an anti-static shorting pin is inserted into the flexible board. (FPC board)
   When removing or connecting the short pin, finish the job in as short time as possible.
3. Take care not to apply excessive stress to the flexible board. (FPC board)
4. Do not turn the variable resistor (laser power adjustment). It has already been adjusted.

• Grounding for electrostatic breakdown prevention

1. Human body grounding
   Use the anti-static wrist strap to discharge the static electricity from your body.
2. Work table grounding
   Put a conductive material (sheet) or steel sheet on the area where the optical pickup is placed, and ground the sheet.

Caution:
The static electricity of your clothes will not be grounded through the wrist strap. So, take care not to let your clothes touch the optical pickup.

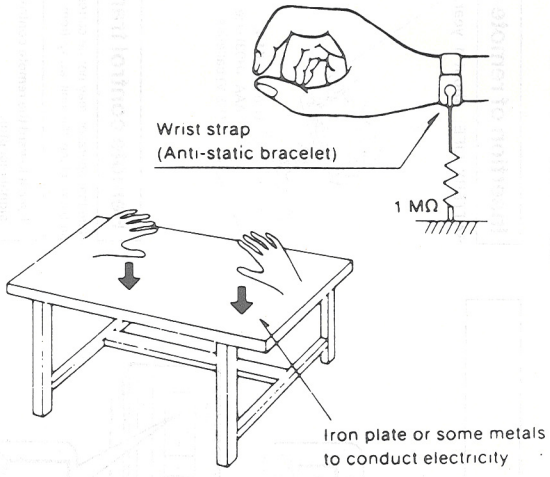

INSTRUCTIONS FOR TRAVERSE OIL (Part No. SZZOL31)

The container contains 6g (approx. 3ml) of oil.
One application (one shaft) uses 0.05ml of oil.

How to Use

(1) Remove the guide shaft in the traverse deck from the optical pickup and clean off any dust from the guide shaft.
(2) Apply one drop of the SZZOL31 to the tip of the guide shaft.
(3) Hold the guide shaft so that its oiled end touches the optical pickup and insert it into the bearing while rotating it slowly.
(4) After securing the guide shaft, move the optical pickup by hand several times to the left and right to distribute the oil on the guide shaft.

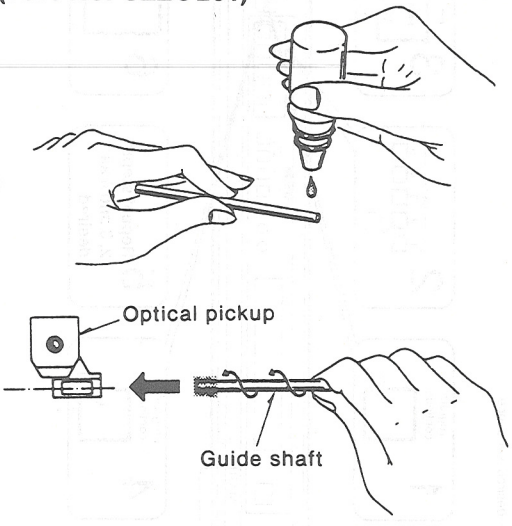

"ATTENTION SERVICER"
Some chassis components may have sharp edges. Be careful when disassembling and servicing.

DISASSEMBLY INSTRUCTIONS

Warning: This product uses a laser diode. Refer to caution statements on page 3.
ACHTUNG:
- Die lasereinheit nicht zerlegen.
- Die lasereinheit darf nur gegen eine vom hersteller spezifizierte einheit ausgetauscht werden.

∗This CD player is equipped with FPC boards, so handle them with care during disassembly and reassembly.

Ref. No. 1	Removal of the dust cover
Procedure 1	• Remove the dust cover in the direction of the arrow.

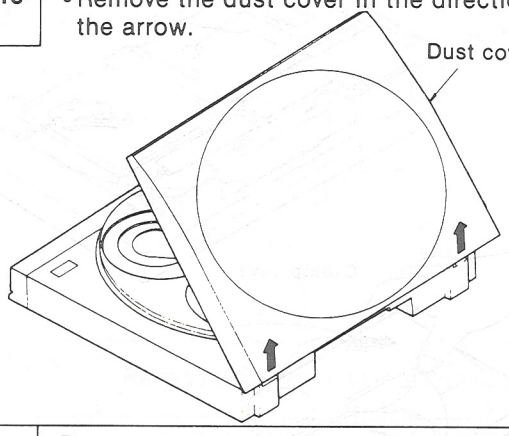

Ref. No. 2	Removal of the bottom cover
Procedure 2	• Remove the 7 screws (❶~❼).

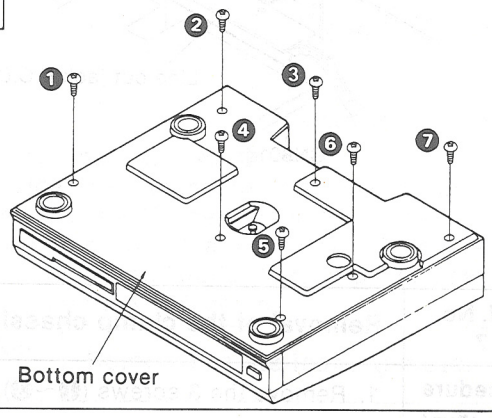

Ref. No. 3	Removal of the power source P.C.B., power transformer and power switch rod
Procedure 2→3	1. Remove the 3 screws (❶~❸). 2. Remove the 1 connector (CN1). 3. Remove the power source P.C.B. in the direction of the arrow. 4. Remove the power switch rod by using a screwdriver. 5. Unsolder the terminals of the power transformer. **Note:** Set the power switch to the "OFF" position.

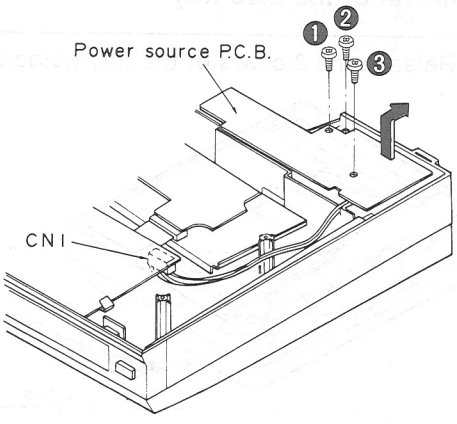

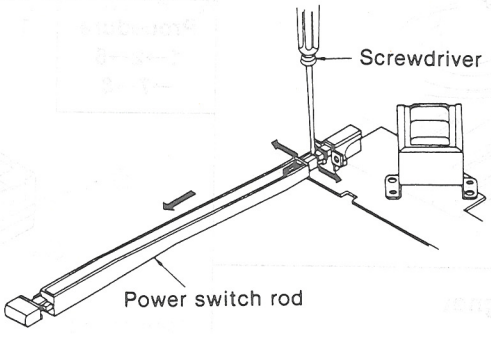

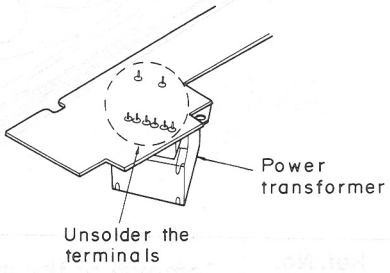

Ref. No. 4	Removal of the operation P.C.B.
Procedure 2→4	■ **Removal of the operation P.C.B.** 1. Remove the 6 screws (❶~❻). 2. Remove the 2 connectors (CN1, CN301).

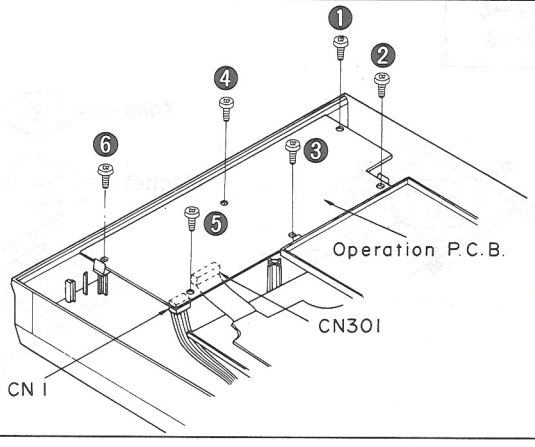

Ref. No. 5	Removal of the line out jack P.C.B.
Procedure 2→5	1. Remove the 1 screw (❶). 2. Remove the 1 connector (CN801).

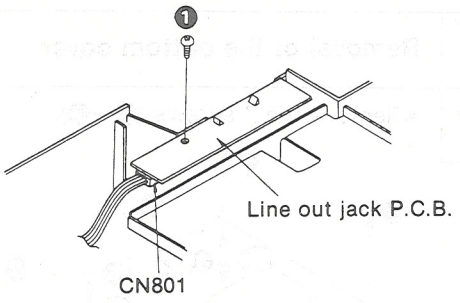

Ref. No. 7	Removal of the clamp chassis
Procedure 1→2→6→7	1. Remove the 3 screws (❶~❸).

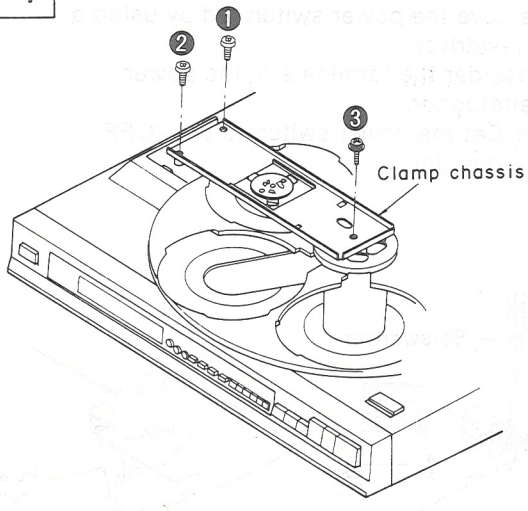

Ref. No. 9	Removal of the magnet
Procedure 1→2→6→7→9	• Release the 3 claws.

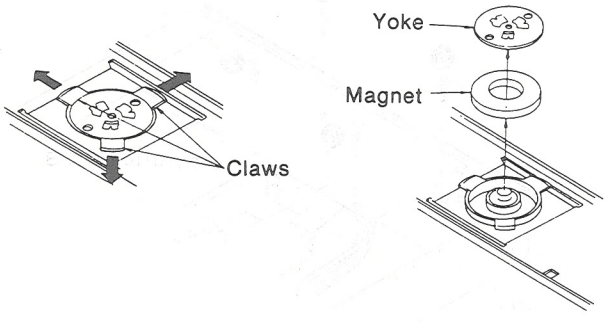

Ref. No. 6	Removal of the clamp cover
Procedure 1→2→6	1. Release the 2 claws. 2. Remove the clamp cover in the direction of the arrow.

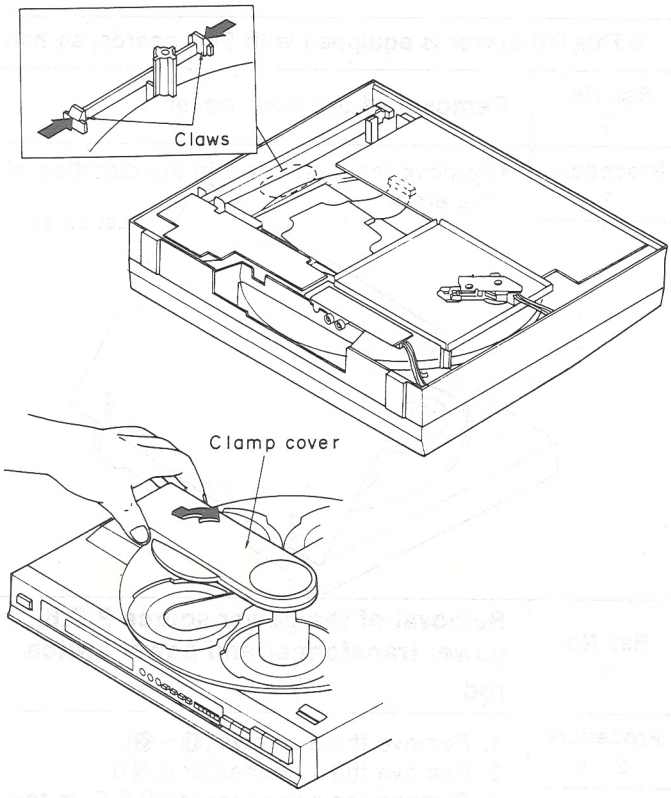

Ref. No. 8	Removal of the disc tray
Procedure 1→2→6→7→8	1. Release the 2 claws of the tray holder.

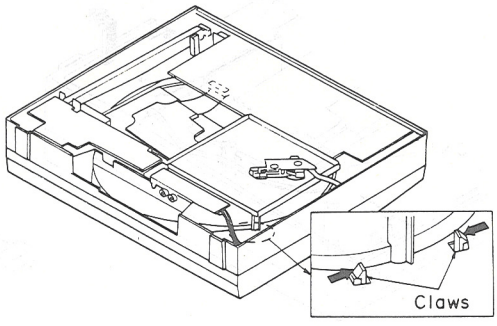

2. Remove the disc tray in the direction of the arrow.

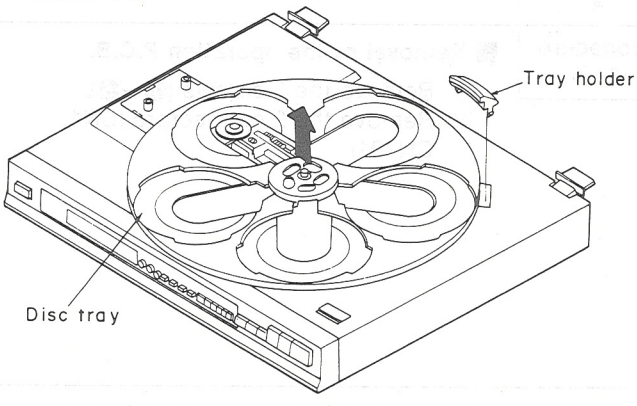

Ref. No. 10	Removal of the loading chassis
Procedure 8→10	1. Remove the 7 screws (❶~❼). 2. Remove the 2 connectors (CN301, CN451).

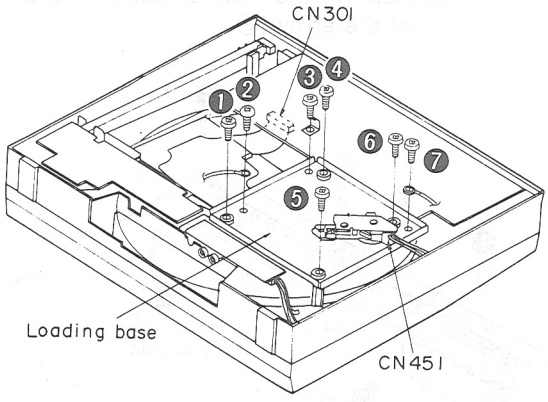

Ref. No. 11	Removal of the servo P.C.B.
Procedure 8→10→11	

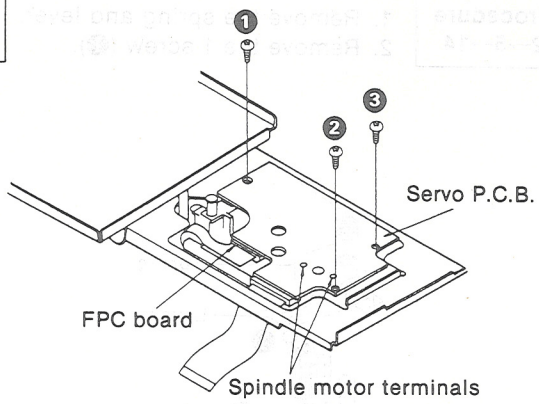

1. Remove the 3 screws (❶~❸).
2. Unsolder the 2 terminals of spindle motor.
3. Remove the FPC board from the optical pickup.

Caution: To prevent the breakdown of the laser diode, antistatic shorting pin is inserted into the FPC board.

Ref. No. 12	Removal of the optical pickup
Procedure 8→10→12	

Refer to the handling precautions for optical pickup and instructions for traverse oil (See page 8).

1. Remove the 2 screws (❶, ❷).
2. Unsolder the 2 terminals and the 2 screws (❸, ❹).

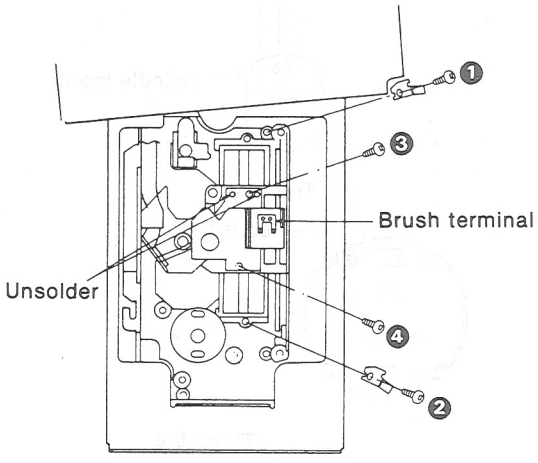

Caution: Take care not to touch the brush terminal.

Ref. No. 13	Removal of the loading motor
Procedure 8→10→13	

1. Remove the drive belt.
2. Remove the 3 screws (❶~❸).
3. Release the 2 claws.
4. Unsolder the 2 terminals of the loading motor.

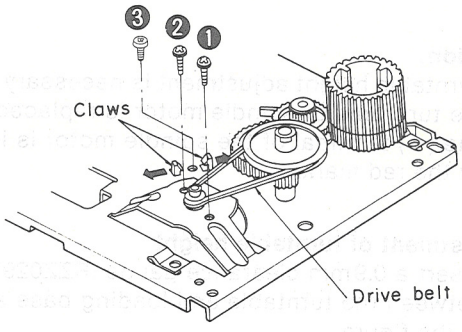

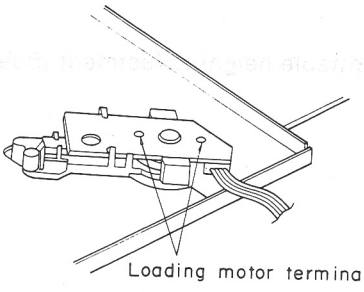

Ref. No. 14	Removal of the sensor P.C.B.
Procedure 2→5→14	1. Remove the spring and lever. 2. Remove the 1 screw (❶).

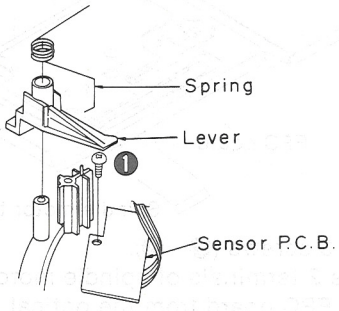

Ref. No. 15	Removal of the sub button and main button
Procedure 2→4→15	1. Remove the 2 screws (❶, ❷). 2. Remove the sub button in the direction of the arrow Ⓐ. 3. Remove the 2 screws (❸, ❹). 4. Remove the main button in the direction of the arrow Ⓑ.

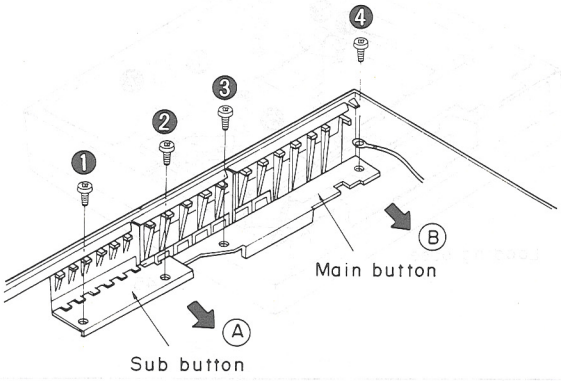

Ref. No. 16	Removal of the spindle motor
Procedure 8→10→12 →16	

1. Loosen the screw (❶) by using a 1.27mm allen wrench and remove the turntable.
2. Remove the 2 screws (❷, ❸).

Caution:
1. Turntable height adjustment is necessary any time the turntable or spindle motor is replaced.
2. The (+) terminal of the spindle motor is indicated by the red mark.

Adjustment of turntable height
1. Insert a 0.9mm clearance gauge (RZZ0297) between the turntable and loading base as shown in the figure.
2. Tighten the turntable set-screw by using a 1.27mm allen wrench.

Caution:
Refer to turntable height adjustment (See page 16).

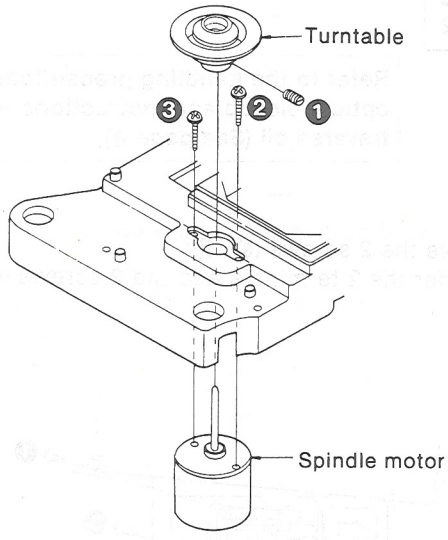

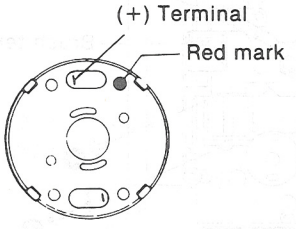

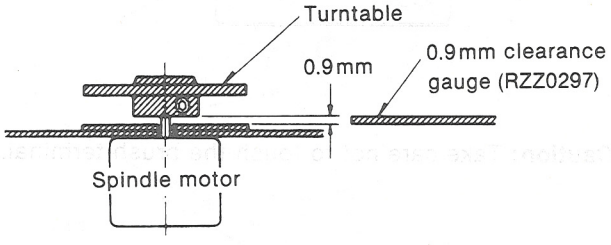

Ref. No. 17	How to check the main P.C.B.
Procedure 1→2→6→7→8→9→17	

• When checking the foil side of the main P.C.B. and replacing the parts, do as shown here.

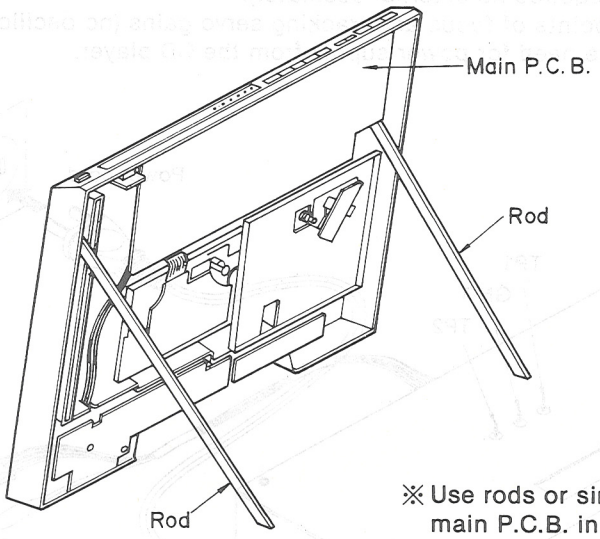

※ Use rods or similar object to hold the main P.C.B. in an upright position.

MEASUREMENTS AND ADJUSTMENTS

Warning: This product uses a laser diode. Refer to caution statements on page 3.
Caution: During adjustment, never connect CH-2 probe's GND to any place for it may short Vref line. (Connect CH-1 probe's GND to specified TP. described in each section.)

PREPARTION

1. Remove the dust cover (refer to disassembly instruction Ref. No. 1).
2. Remove the bottom cover (refer to disassembly instruction Ref. No. 2).
3. Remove the clamp cover (refer to disassembly instruction Ref. No. 6).
4. Remove the clamp chassis (refer to disassembly instruction Ref. No. 7).
   Set the power switch to ON.
5. (1) The carousel rotates clockwise and stops at the fifth tray.
   (2) Set the power switch to OFF and then to ON again, when the optical deck reaches it's height position, set the power switch to OFF.
6. Remove the disc tray (refer to disassembly instruction Ref. No. 8).
7. Place the test disc and secure it by using the magnet (refer to disassembly instruction Ref. No. 9).
8. Set the unit in the test mode as follows:
   (hold the play, stop and disc 1 keys (3 keys) on and set the power switch to ON.
9. Follow the adjustment procedure.

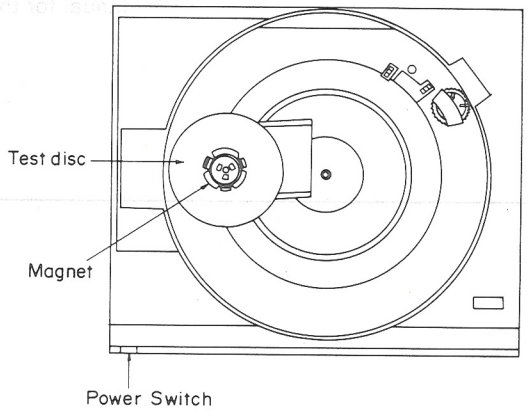

NEW SERVO GAIN ADJUSTER (Servo Amp. Adjusting Fixture)

The following introduces the improved version of the current servo gain adjuster (SZZP1017F):

Part number: SZZP1094C–1

Features:

(1) Contains all oscillation frequencies and output adjustments needed for focus servo gain, tracking servo gain, and tracking balance adjustment (requires no external oscillator).
(2) Panel indicators indicate the best points of focus and tracking servo gains (no oscilloscope needed).
(3) Internal power supply eliminates the need for power supply from the CD player.

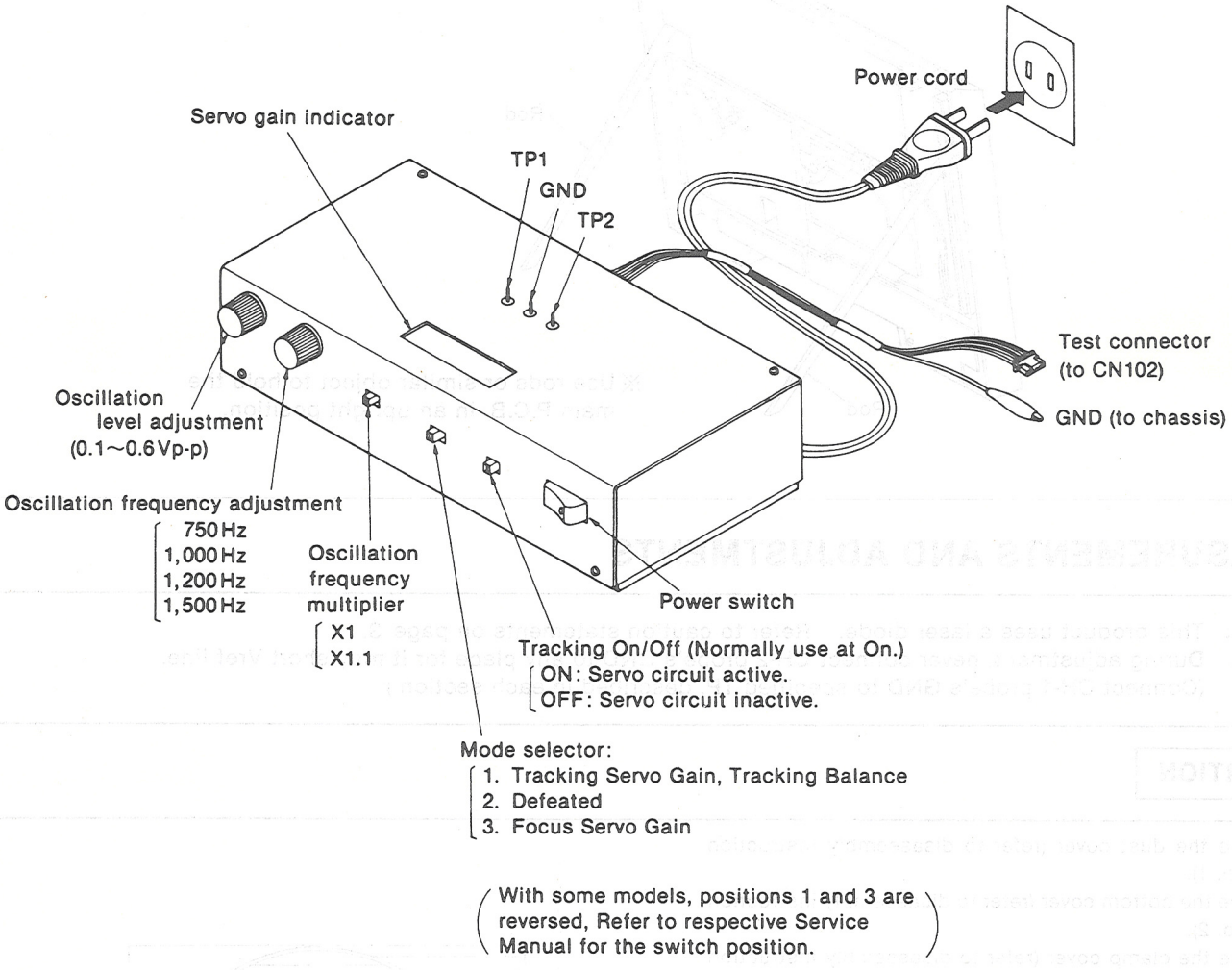

(With some models, positions 1 and 3 are reversed, Refer to respective Service Manual for the switch position.)

ADJUSTMENT POINTS

- **Servo P.C.B.**

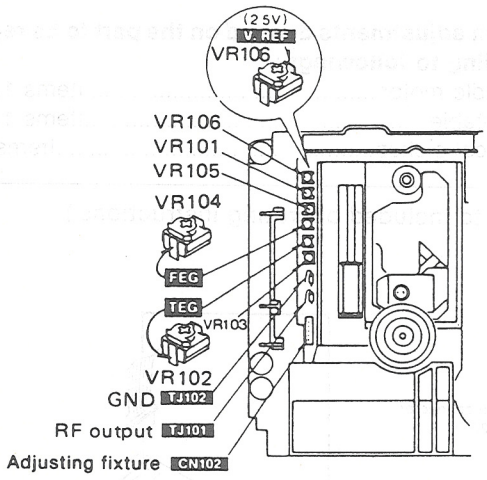

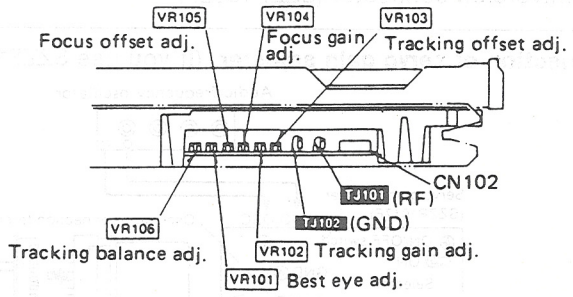

- **Main P.C.B.** (Power supply for SZZP1017F only.)

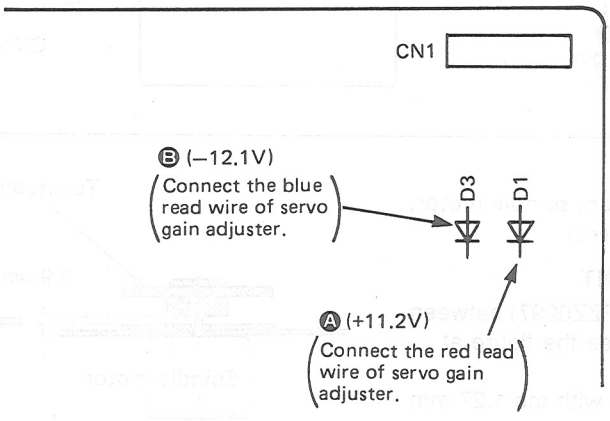

- **Temporary setting of each VR**

Temporary VR setting if any of the trimmer VRs are replaced or require readjustment, temporarily set them to the following positions:

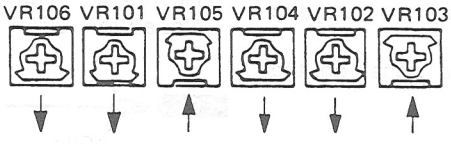

Measuring Instruments and Special Tools

* Servo gain adjuster (SZZP1017F or SZZP1094C–1)
* Test discs
1. Playability test disc (SZZP1054C or SZZP1014F)
2. Uneven test disc (SZZP1056C)
3. Black band test disc (SZZP1057C)
* Normal disc
* Dual-beam oscilloscope with bandwidth of 30 MHz or better (with EXT trigger and 1 : 1 probe).
* Audio frequency (AF) osillator
* Comversion connector (SZZP1032F)
* Allen wrench (M2.0) (SZZP1101C)
* Allen wrench (M1.27)
* 0.9mm clearance gauge (RZZ0297)
* Filter

Perform adjustments depend on the part to be replaced according to followings:

(1) Spindle motor .....Items 1, 3 to 8
(2) Turntable .....Items 1, 3 to 8
(3) Optical pickup.....Items 2 to 8

Connection of servo gain adjuster (If you use SZZP1094C, refer to included operating instructions.)

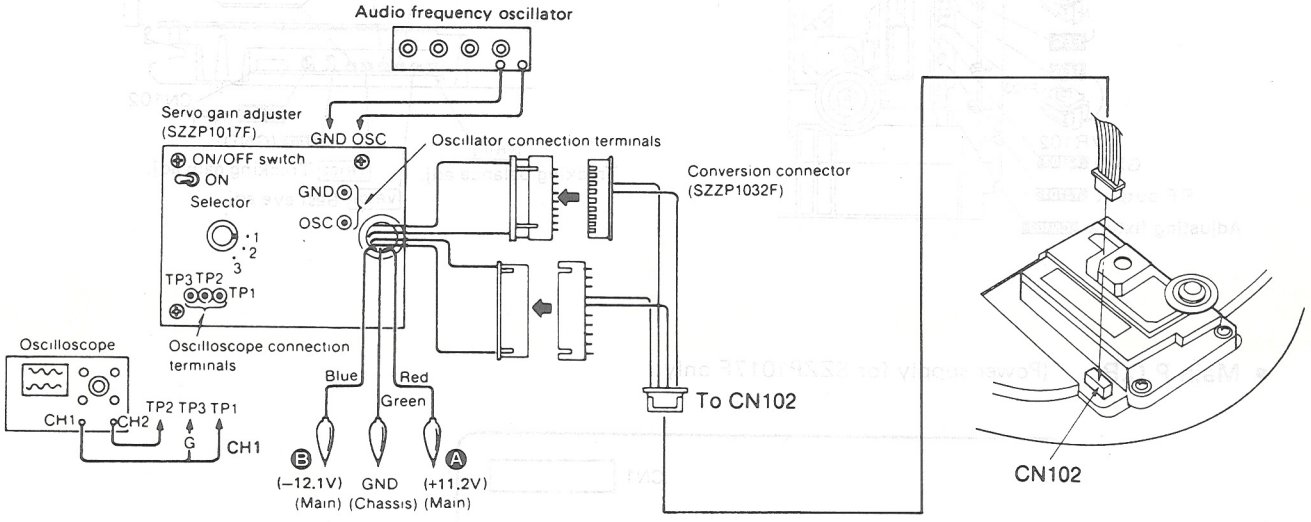

(See page 15.)

Adjusting Procedure

* If you have replaced the optical pickup, spindle motor, or turntable, do the following adjustment:

(1) TURNTABLE HEIGHT ADJUSTMENT

1. Insert the 0.9 mm clearance gauge (RZZ0297) between the turntable and the loading base (see the figure at right).
2. Tighten the turntable retention screw with the 1.27 mm allen wrench.
3. Connect the oscilloscope's CH. 1 probe across VR104's **FEG** (+) and VR106's **V. REF** (–) terminals via a filter.
   (Note: A voltage of 2.5V appears at the V. REF terminal. Take care not to short the player's chassis to the oscilloscope ground.)
   Oscilloscope setting: VOLT ..... 50 mV
   SWEEP ..... 1 ms.
   Input coupling ... DC
4. Adjust oscilloscope's DC zero balance.
5. Switch the player power **ON**, and play the test disc (SZZP1014F or SZZP1054C).
6. Measure the voltage amplitude of the signal on the oscilloscope.

Note 1. If the measured amplitude is within a range of +/– 15 mV, the turntable height is correct. If it is outside this range, adjust the turntable height by using the clearance gauge as a pry.
If the amplitude exceeds +15 mV, lower turntable.
If the amplitude is below –15 mV, elevate the turntable.

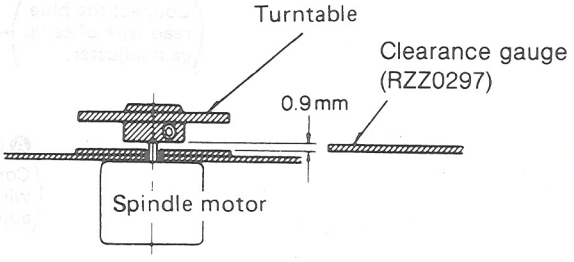

Note 2. If the measured amplitude greatly surpasses or falls short of the range above, set **VR105** at or around the center, then try to adjust the height again. (Then be sure to adjust the focus offset as well.)

• Filter for turntable height adjustment
Resistor: ERDS2TJ103 (10kΩ)
Capacitor: ECQV1H104KV (0.1μF)

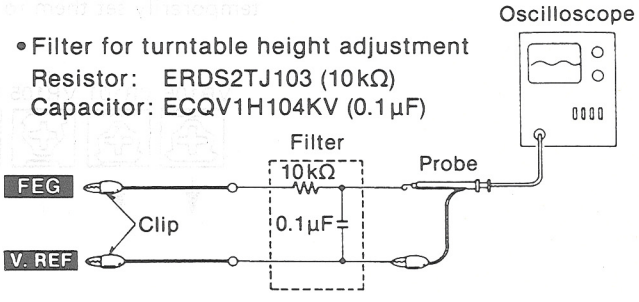

(2) MECHANICAL ADJUSTMENT

1. Connect the oscilloscope's CH. 1 probe across **TJ101** (+) and **TJ102** (–) on the Servo P.C.B.
   Oscilloscope setting: VOLT . . . . . 100 mV
   SWEEP . . . . . 0.5 μs.
   Input coupling . . . AC
2. Switch the player power **ON**, and play track **9** on the test disc (SZZP1056C). (Playing any other track may yield a false adjustment.)
3. Leave the player in Play mode, and place it as shown in the figure on the right.
4. Alternately adjust the two mechanical adjusting screws with the 2.0mm allen wrench (SZZP1101C) until the vertical fluctuation of RF signal is minimized and the eye pattern is most stretched.
5. After completing the adjustment, lock the **mechanical adjustments** with lock paint (RZZOL01).

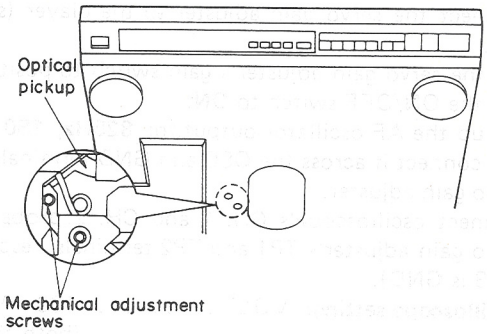

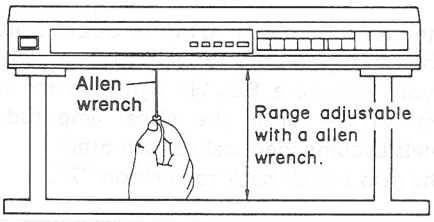

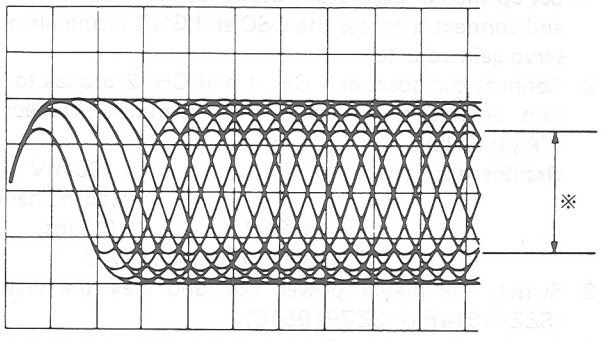

※ Most stretched eye pattern.

(3) BEST EYE (PD BALANCE) ADJUSTMENT

1. Connect the oscilloscope's CH. 1 probe across **TJ101** (+) and **TJ102** (–) on the Servo P.C.B.
   Oscilloscope setting: VOLT . . . . . 100 mV
   SWEEP . . . . . 0.5 μ s
   Input coupling . . . AC
2. Switch the player power **ON**, and play the 1kHz (track 1) on the test disc (SZZP1054C).
3. Adjust **VR101** until the vertical fluctuation of RF signal is minimized and the eye pattern is most stretched.

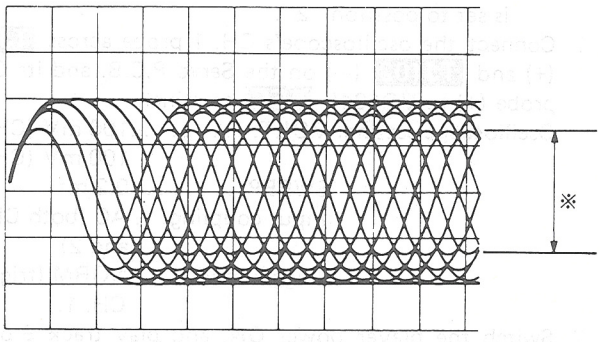

※ Most stretched eye pattern.

(4) FOCUS GAIN ADJUSTMENT

1. Connect the servo gain adjuster to the player (see page 15).
2. Set the servo gain adjuster's gain switch to position "2" and the ON/OFF switch to **ON**.
3. Set up the AF oscillator output for **825Hz, 150 mVp-p**, and connect it across the OSC and GND terminals on the servo gain adjuster.
4. Connect oscilloscope's CH. 1 and CH. 2 probes to the servo gain adjuster's TP1 and TP2 terminals, respectively (TP3 is GND).
   Oscilloscope setting: VOLT . . . . . 100 mV (both channels)
   SWEEP . . . . . 0.2 ms.
   Input coupling . . . AC
5. Play the test disc (SZZP1014F or SZZP1054C).
6. Set the servo gain adjuster's gain switch to position "3", and you will see a 825 Hz signal on the oscilloscope. Adjust **VR104** until the signal amplitudes on both channels become identical to each other.
7. Set the gain switch back to position "2".

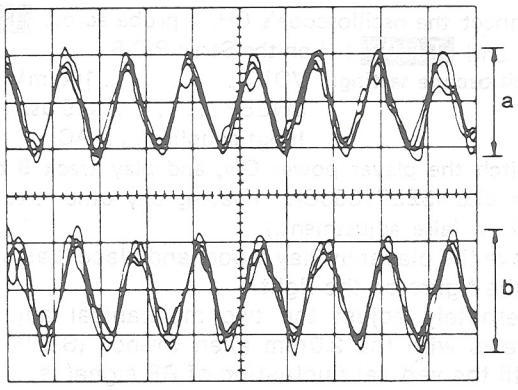

※ Adjust **VR104** until a equals b.

(5) TRACKING GAIN ADJUSTMENT

1. Set up the AF oscillator output for **1.1 kHz, 150 mVp-p**, and connect it across the OSC and GND terminals on the servo gain adjuster.
2. Connect oscilloscope's CH. 1 and CH. 2 probes to the servo gain adjuster's TP1 and TP2 terminals, respectively (TP3 is GND).
   Oscilloscope setting: VOLT . . . . . 100 mV (both channels)
   SWEEP . . . . . 0.2 ms.
   Input coupling . . . AC
3. Switch the player power **ON**, and play the test disc (SZZP1014F or SZZP1054C).
4. Set the servo gain adjuster's gain switch to position "1", and you will see a 1.1 kHz signal on the oscilloscope. Adjust **VR102** until the signal amplitudes on both channels become identical to each other.
5. Set the gain switch back to position "2".

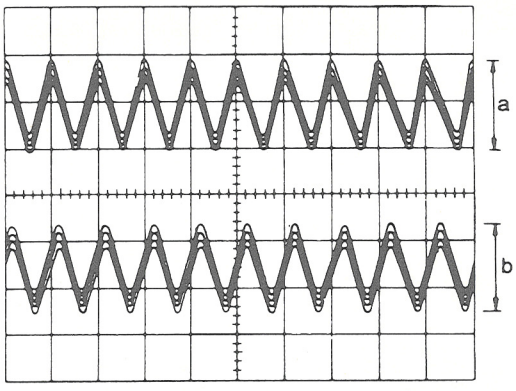

※ Adjust **VR102** until a equals b.

(6) FOCUS OFFSET ADJUSTMENT

Note: Make sure that the servo gain adjuster's gain switch is set to position "2".

1. Connect the oscilloscope's CH. 1 probe across **TJ101** (+) and **TJ102** (−) on the Servo P.C.B. and its CH. 2 probe (+) to VR104's **FEG** terminal.
   Oscilloscope setting: VOLT. . . . . .100 mV (CH. 1)
   100 mV (CH. 2)
   SWEEP. . . . . .0.2 ms.
   Input coupling. . . AC (both CH. 1 and 2)
   Trigger mode . . . .NORM (trigger CH. 1.)
2. Switch the player power **ON**, and play track **9** on the test disc (SZZP1057C).
3. Trigger the oscilloscope's CH. 1 so that the following waveforms are observed. Adjust **VR105** until the dip in the RF signal envelope on CH. 1 is smooth and the signal amplitude on CH. 2 is minimized, i.e. when amplitude A equals amplitude B.

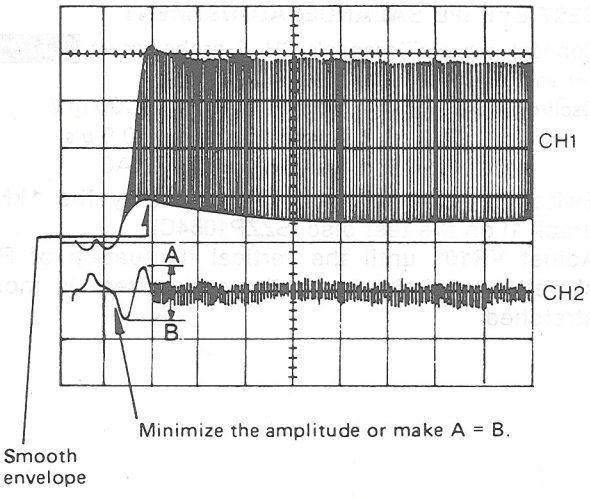

(7) TRACKING OFFSET ADJUSTMENT

Note: Make sure that the servo gain adjuster's gain switch is set to position "2".

1. Connect the oscilloscope's CH. 1 probe across **TJ101** (+) and **TJ102** (−) on the Servo P.C.B., and its CH. 2 probe (+) to VR102's **TEG** terminal.
   Oscilloscope setting: VOLT. . . . . .100 mV (CH. 1)
   100 mV (CH. 2)
   SWEEP. . . . . .0.2 ms.
   Input coupling. . AC (both CH. 1 and 2)
   Trigger mode. . . NORM (trigger CH. 1.)
2. Switch the player power **ON**, and play track **9** on the test disc (SZZP1057C).
3. Trigger the oscilloscope's CH. 1 so that the following waveforms are observed. Adjust **VR103** until the dip in the RF signal envelope on CH. 1 is smooth and the signal amplitude on CH. 2 is minimized, i.e. when amplitude A equals amplitude B.

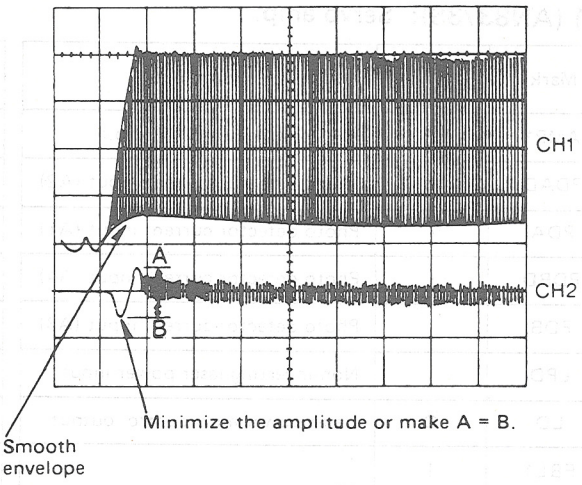

(8) TRACKING BALANCE ADJUSTMENT

1. Make sure that the servo gain adjuster's gain switch is set to position "2".
2. Set up the AF oscillator output for **1.1 kHz, 600 mVp-p**, and connect it across the OSC and GND terminals on the servo gain adjuster.
3. Connect the oscilloscope's CH. 1 probe across **TJ101** (+) and **TJ102** (−) on the Servo P.C.B. and CH. 2 probe (+) to the OSC terminal on the servo gain adjuster.
   Oscilloscope setting: VOLT. . . . . .100 mV (CH. 1)
   200 mV (CH. 2)
   SWEEP. . . . . .0.1 ms.
   Input coupling. . .AC (both CH. 1 and 2)
   Trigger mode . . .NORM (trigger CH. 2)
4. Switch the player power **ON**, and play the test disc (SZZP1014F or SZZP1054C).
5. Set the servo gain adjuster's gain switch to position "1", and adjust **VR106** so that the wafveform of the output section marked with ※ is balanced.
6. Disconnect the servo gain adjuster's leads from the player.

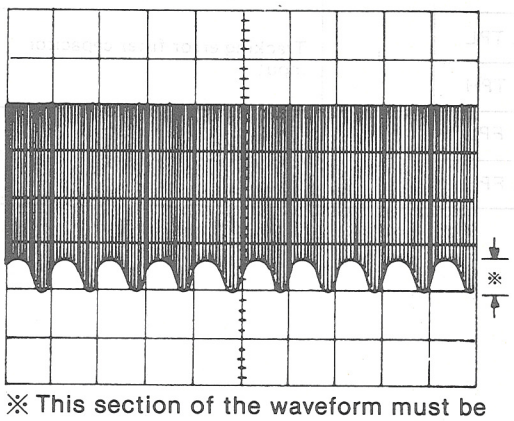

※ This section of the waveform must be balanced.

(9) CHECK OF PLAY OPERATION AFTER ADJUSTMENT

* **Checking Skip Search**

1. Play an ordinary musical program disc.
2. Press the skip button to check for normal skip search operation (in both the forward and reverse directions).

* **Checking Manual Search**

1. Play an ordinary musical program disc.
2. Press the manual search button to check for smooth manual search operations at either low or high speed (in both the forward and reverse directions).

* **Checking Using Defect Disc**

1. Play the 0.7 mm black dot and the 0.7 mm wedge on the defect test disc (SZZP1054C) and verify that no sound skip or noise occurs.
2. Play the middle tracks of the uneven test disc and verify that no sound skip or noise occurs.

TERMINAL FUNCTION OF IC'S

• IC101 (AN8373S): Servo amp.

Pin No.	Mark	I/O Division	Function
1	AMP1	I	RF signal input (X30 amp.)
2	PDAD	I	Photo detector current input (A2)
3	PDA	I	Photo detector current input (A1)
4	PDBD	I	Photo detector current input (A4)
5	PDB	I	Photo detector current input (A3)
6	LPD	I	Non-inverting laser power input
7	LD	O	Laser power auto control output
8	FBL1	I	PD balance adjustment
9	FBL2	I	
10	TBL1	I	Tracking balance adjustment
11	TBL2	I	
12	FOOFS	I	Focus offset adjustment
13	IVA	O	Current/voltage conversion output (A)
14	IVB	O	Current/voltage conversion output (B)
15	FE	O	Focus gain adjustment output
16	FPI	I	Focus error signal input
17	TPI	I	Tracking error signal input
18	C. TPL	I	Tracking error filter capacitor input
19	C. TPH		
20	C. FPL	I	Focus error filter capacitor input
21	C. FPH		

Pin No.	Mark	I/O Division	Function
22	TPO	O	Tracking error signal output
23	FPO	O	Focus error signal output
24	FGC	I	Focus gain up signal input (Not used, connected to GND)
25	TGC	I	Tracking gain up signal input (Not used, connected to GND)
26	GD	I	Focus/Tracking down signal input (Not used, connected to GND)
27	PTO	O	Position detecting amp. output
28	PTI	I	Position detecting amp. input
29	PBO	O	Position detecting buffer output
30	POT	I	Position detecting buffer input
31	BDO	O	Dropout detection output
32	$\overline{\text{RFDET}}$	O	RF detection signal output
33	SDO	O	Dropout detection pulse output
34	C. SBDO	I	Dropout detecting capacitor input
35	ARF	O	RF signal output
36	C. AGC	I	AGC detecting capacitor input
37	VCC	I	Power supply (+5 V input)
38	LDON	I	Laser power control input
39	RF IN	I	RF signal input
40	AMPO	O	RF signal output
41	VREF	O	Reference voltage output
42	GND	I	Ground terminal

• IC102 (AN8374S): Servo processor

Pin No.	Mark	I/O Division	Function
1	LSA	I	Phase difference input (A)
2	LSB	I	Phase difference input (B)
3	TEOFS	O	Tracking offset adjustment
4	TE	O	Tracking gain adjustment
5	TEG	I	
6	TE OUT	O	Tracking error signal output
7	TE BPF	I	Tracking error gain detecting filter (Not used, open)
8	FEG	I	Focus gain adjustment
9	FE OUT	O	Focus error signal output
10	CLW	O	Triangular wave oscillator capacitor output
11	VREF	I	Reference voltage input
12	ARF	I	RF signal input
13	CDSL	I	Data slice filter capacitor input
14	FPC	I	Frequency difference signal input
15	GND	I	Ground terminal
16	C. PLL	I	PLL loop filter constant
17	VSS	I	Ground terminal
18	CLK	I	Frequency pull-in clock signal (88.2 kHz) input
19	SRF	O	Sliced and digitized RF signal output
20	PCK	O	Clock output extracted from SRF
21	EFM	O	EFM signal output synchronous with PCK

Pin No.	Mark	I/O Division	Function
22	VDD	I	Power supply (+5 V input)
23	SPCNT	O	Track crossing speed control output output (Not used, open)
24	SENSE	O	Selector output (track crossing state)
25	TRV	O	Traverse servo control output
26	$\overline{\text{FLOCK}}$	O	Focus lock signal output
27	KICK	O	Track kick signal output
28	LDON	O	Laser power control output
29	VDET	O	Focus/tracking gain up output (Not used, open)
30	CNT1	I	Control input (FOON: Focus Servo On signal)
31	CNT2	I	Control input (TRON: Tracking Servo On signal)
32	CNT3	I	Control input (KICKF: Kick Direction (Forward) command)
33	CNT4	I	Control input (KICKR: KICK Direction (Backward) command)
34	TRVF	I	Traverse forward command signal
35	TRVR	I	Traverse backward command signal
36	$\overline{\text{RFDET}}$	I	RF detection signal input
37	BDO	I	Dropout detection input
38	VCC	I	Power supply (+5 V input)
39	TVPO	O	Traverse position detecting resistor/capacitor inputs
40	TVPI	I	
41	BROUT	O	Tracking drive control output
42	BRIN	I	Tracking error signal input

• IC103 (AN3877N): BTL drive

Pin No.	Mark	I/O Division	Function
1	PVCC	I	Driver power supply (+7.7V input)
2	VCC	I	Power supply (+7.7V input)
3	TB	O	External transistor base driving output
4	VMON	O	Voltage (+4.9V) output
5	TVDI	I	Traverse error signal input
6	FDI	I	Focus error signal input
7	TDI	I	Tracking error signal input
8	VREF	I	Reference voltage input

Pin No.	Mark	I/O Division	Function
9	TD–	O	Inverting output of tracking driver
10	TD+	O	Non-inverting output of tracking driver
11	FD–	O	Inverting output of focus driver
12	FD+	O	Non-inverting output of focus driver
13	TVD–	O	Inverting output of traverse driver
14	TVD+	O	Non-inverting output of traverse driver
15	$\overline{\text{RESET}}$	O	Reset signal output
16	PC	I	PC input (connect to GND.)

• IC301 (MN6625): Digital signal processor

Pin No.	Mark	I/O Division	Function
1	BYTCK	O	Serial data byte clock (Not used, open)
2	FCLK	O	Crystal frame clock (Not used, open)
3	DEMPH	O	De-emphasis ON signal (de-emphasis ON at "H")
4	SRDATA	O	Serial data output (MSB first)
5	SRCK	O	Serial bit clock output
6	LRCK	O	LR discrimination signal output
7	WDCK	O	Serial data output word clock
8	LDG	O	L channel deglitch signal (Not used, open)
9	RDG	O	R channel deglitch signal (Not used, open)
10	IPFLAG	O	Interpolation flag (interpolation at "H")
11	FLAG	O	Error flag terminal
12	XCK	O	Clock (16.9344MHz) output (Not used, open)
13	TEST	I	Test mode selection (Not used, connected to +5V)
14	TX	O	Digital signal output (Not used, open)
15	SLEEP	I	Mode selector ("L":normal, "H":SLEEP mode) (Not used, connected to GND)
16	CSEL	I	Test terminal ("L": normal) (Not used, connected to GND)
17	X1	I	Clock input (16.9344MHz)
18	X2	O	Clock output (16.9344MHz) (Not used, open)
19	VSS	I	GND terminal
20	BLKCK	O	Sub-code block (Q data) clock (75Hz)
21	$\overline{\text{CLDCK}}$	O	Sub-code frame (Q data) clock (7.35kHz)
22	$\overline{\text{SUBQ}}$	O	Sub-code (Q data) output
23	$\overline{\text{RST}}$	I	Reset signal input (reset at "L")
24	MLD	I	Command load signal input
25	MCLK	I	Command clock signal input
26	MDATA	I	Command data input
27	DMUTE	I	Muting control
28	$\overline{\text{TRON}}$	I	Tracking servo ON signal (tracking servo ON at "L")
29	STAT	O	Processing condition (CRC, CUE, CLVS, TT STOP, FCLV)
30	SUBC	O	Sub-code serial output data (Not used, open)
31	SBCK	I	Clock for sub-code serial output (Not used, open)
32	SMCK	O	Clock output (4.2336MHz)
33	VDD	I	Power supply (connected to +5V)
34	MEMP	I	Emphasis signal input (Not used, open)
35	FG	I	Spindle motor FG signal input (Not used, open)
36	PC	O	Spindle motor ON signal (ON at "L")
37	EC	O	Spindle motor drive signal
38	RESY	O	Resynchronizing signal (Not used, open)
39	DO	I	Drop-out signal (Drop-out at "H")
40	SRF	I	EFM signal input (DSL)
41	EFM	I	EFM signal input (PLL)
42	PCK	I	PLL extract clock input (4.3218MHz)
43	FPC	O	PLL frequency comparision signal
44 ~ 51	D7 ~ D0	I/O	16K RAM data input/output
52	RAM/OE	O	16K RAM $\overline{\text{OE}}$ signal
53	RAM/WE	O	16K RAM $\overline{\text{WE}}$ signal
54 ~ 64	RAM/A0 ~ RAM/A10	O	16K RAM address signal (RAMA0: LSB, RAMA10: MSB)

• IC401 (MN187124PKD4): System control

Pin No.	Mark	I/O Division	Function
1	VDD	I	Power supply terminal
2	OSC2	I	Clock terminal (Not used, open)
3	OSC1	I	Clock input
4	Vss	–	GND terminal
5	XI	I	Optical servo condition input (Not used, connected to GND)
6	XO	O	Not used, open
7	STAT	I	Key input strobe and processing status input from signal processor LSI traverse position detector
8	FLOCK	I	Optical servo condition (Focus) input
9	CNT1	O	Optical servo IC control signal (FOON: Focus servo)
10	CNT2	O	Optical servo IC control signal (TR ON: Tracking servo)
11	CNT3	O	Optical servo IC control signal (KICK F: Kick direction [Forward] command)
12	CNT4	O	Optical servo IC control signal (KICK R: Kick direction [Reverse] command)
13	FWD	O	Traverse forward command signal
14	REV	O	Traverse reverse command signal
15	REMOCON	I	Remote control signal
16	BLKCK	I	Sub-code block (Q-data) clock (75 kHz)
17	MUTE	I	Muting signal
18	REC. EN	I	Synchro rec control signal
19	SYNCHRO	O	Synchro rec control signal
20	SENSE	I	Optical servo condition (Track cross)
21	RESET	I	Reset signal (Teset at "L")
22	CLDCK	I	Sub-code frame clock (7.35 kHz)

Pin No.	Mark	I/O Division	Function
23	SUBQ	I	Sub-code "Q" data signal
24	NC	–	Not connected
25	MCLK	O	Command clock signal
26	MLD	O	Command load signal
27	MDATA	O	Command data signal
28	NC	–	Not connected
29	NC	–	Not used connected to GND
30 ~ 37	P47 ~ P40	I	Key scan signal
38 ~ 46	D0 ~ D8	O	FL glide signal
47	D9	–	Not used, open
48	DRAW	O	Motor drive control
49	TURN	O	Motor drive control
50	F/R	O	Motor drive control
51	SLOW	O	Motor drive control
52 53	NC	–	Not connected
54 ~ 63	S9 ~ S0	O	FL segment signal and key Scan signal
64	Vpp	I	FL drive power supply terminal

• IC801 (MN6474): Digital filter & D/A converter

Pin No.	Mark	I/O Division	Function
1	MLD	I	Command load input (load: L)
2	RSTB	I	Reset command
3	IE	I	Not used, connected to GND
4	TP1	O	TEST terminal
5	TP2		
6	TEST1	I	TEST terminal 1 (connected to GND)
7	TEST2	I	TEST terminal 2 (connected to GND)
8	NC	——	Not connected
9			
10	AVDD4	I	Power supply
11	L (−)	O	Lch data output, (−) terminal
12	AVSS4	——	GND terminal
13	AVSS3		
14	L (+)	O	Lch data output, (+) terminal
15	AVDD3	I	Power supply
16	NC	——	Not connected
17	AVDD2	I	Power supply
18	R (+)	O	Rch data output, (+) terminal
19	AVSS2	——	GND terminal (analog system)
20	AVSS1	——	
21	R (−)	O	Rch data output, (−) terminal
22	AVDD1	I	Power supply

Pin No.	Mark	I/O Division	Function
23	DVDD1	I	Power supply
24	DVSS1	——	GND terminal (digital system)
25	X2	O	Clock output
26	X1	I	Clock input
27	NC	——	Not used, open
28	DVDD2	I	Power supply
29	DVSS2	——	GND terminal (digital system)
30	NSUB	I	Sub-strate terminal (Not used, connected to power supply)
31	768fs	O	768fs (33.8688MHz) (Not used, open)
32	192fs	O	192fs (8.4672MHz) (Not used, open)
33	LRPOL	——	LR clock selector (Not used, connected to power supply)
34	L/R	I	LR discrimination signal input
35	SRCK	I	Serial bit clock input
36	SRDATA	I	Serial data input (MSB first)
37	DVSS3	——	GND terminal (digital system)
38	DVDD	I	Power supply
39	384fs	O	384fs (16.9344MHz) output
40	PD	I	Power down terminal (Not used, connected to GND)
41	MDATA	I	Mode control data
42	MLCK	I	Data clock for MDATA

BLOCK DIAGRAM

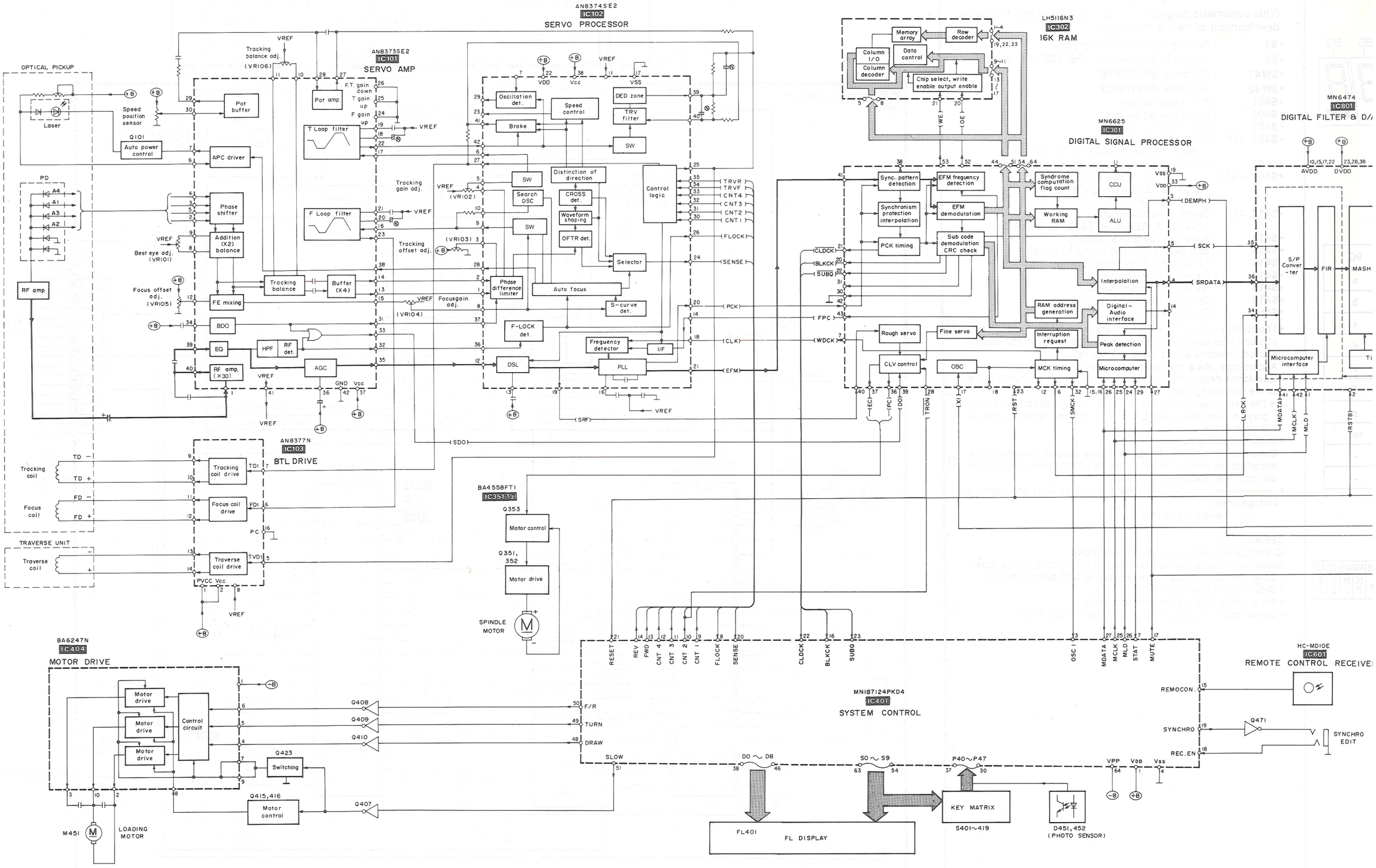

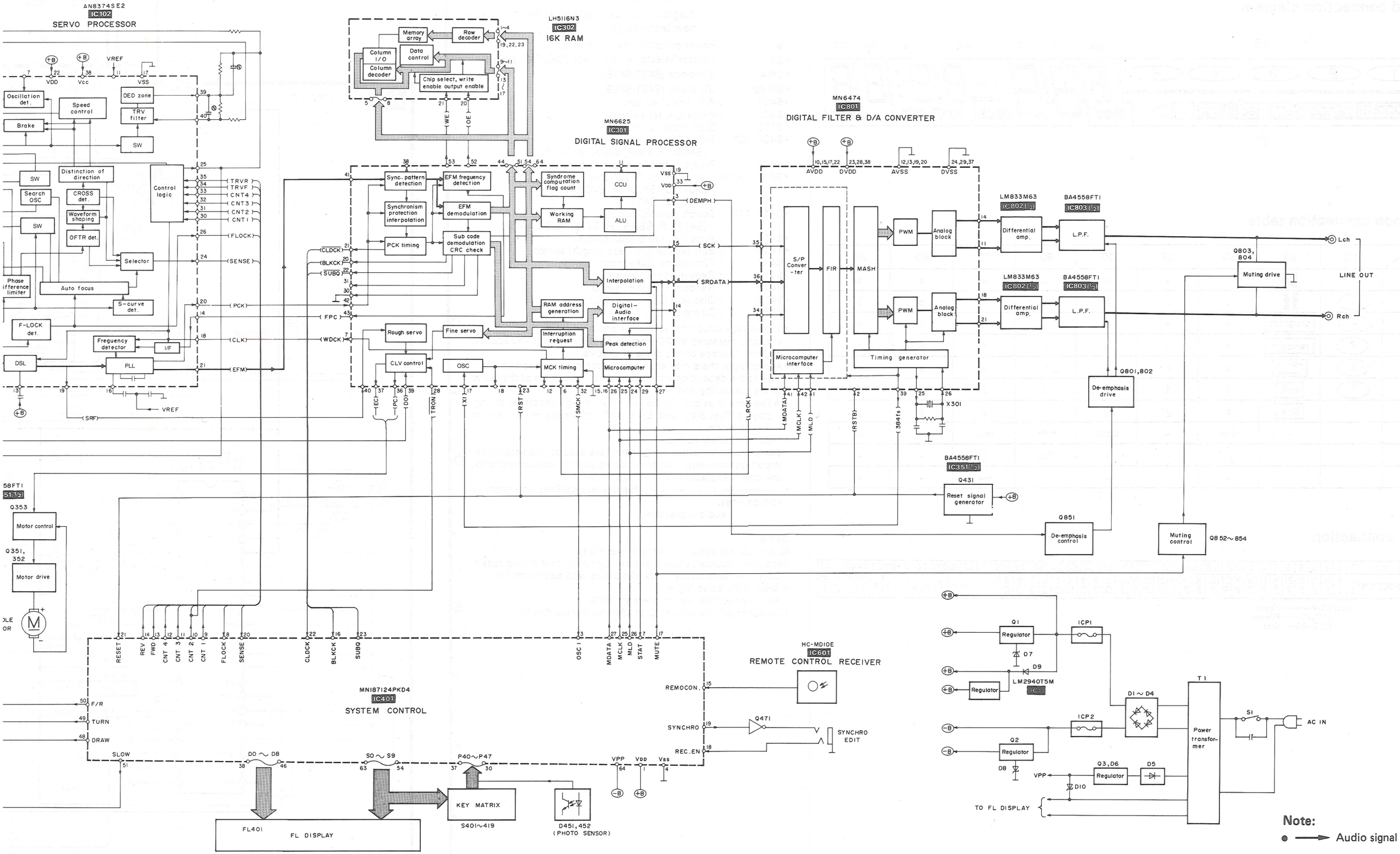
AN8374SE2
IC102
SERVO PROCESSOR
Oscillation det.
Speed control
Brake
DED zone
TRV filter
SW
Distinction of direction
Search OSC
CROSS det.
Waveform shaping
OFTR det.
Control logic
Selector
Auto focus
S-curve det.
Phase difference limiter
F-LOCK det.
Frequency detector
I/F
DSL
PLL
VREF
LH5116N3
IC302
16K RAM
Memory array
Row decoder
Column I/O
Data control
Column decoder
Chip select, write enable output enable
MN6625
IC301
DIGITAL SIGNAL PROCESSOR
Sync. pattern detection
EFM frequency detection
Synchronism protection interpolation
EFM demodulation
PCK timing
Sub code demodulation CRC check
Syndrome computation flag count
CCU
Working RAM
ALU
Interpolation
RAM address generation
Digital-Audio interface
Interruption request
Peak detection
Microcomputer
Rough servo
Fine servo
CLV control
OSC
MCK timing
MN6474
IC801
DIGITAL FILTER & D/A CONVERTER
S/P Conver-ter
FIR
MASH
PWM
Analog block
Microcomputer interface
Timing generator
LM833M63
IC802 (1/2)
Differential amp.
BA4558FT1
IC803 (1/2)
L.P.F.
Muting drive
Q803, 804
LINE OUT
Lch
Rch
De-emphasis drive
Q801,802
X301
BA4558FT1
IC351 (1/2)
Q431
Reset signal generator
Q851
De-emphasis control
Muting control
Q852~854
Motor control
Q353
Motor drive
Q351, 352
MN187124PKD4
IC401
SYSTEM CONTROL
HC-MD10E
IC601
REMOTE CONTROL RECEIVER
REMOCON.
SYNCHRO
REC.EN
Q471
SYNCHRO EDIT
KEY MATRIX
S401~419
D451,452 (PHOTO SENSOR)
FL401
FL DISPLAY
Q1
Regulator
ICP1
D7
D9
LM2940T5M
IC
ICP2
D1~D4
T1
Power transformer
S1
AC IN
Q2
D8
Q3,D6
D5
D10
VPP
TO FL DISPLAY
Note:
Audio signal

INTERNAL CONNECTION OF FL

• Grid connection diagram

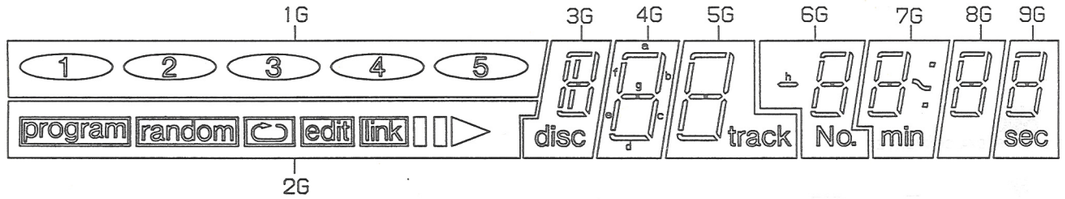

• Anode connection table

	1G	2G	3G	4G	5G	6G	7G	8G	9G
a	-	▶	a	a	a	a	a	a	a
b	5	❚❚	b	b	b	b	b	b	b
c	4	program	c	c	c	c	c	c	c
d	3	random	d	d	d	d	d	d	d
e	2	↻	e	e	e	e	e	e	e
f	1	edit	f	f	f	f	f	f	f
g	-	link	g	g	g	g	g	g	g
h	-	-	disc	-	track	—	min	-	sec
i	-	-	/	-	-	No.	:	-	-
j	-	-	-	-	-	-	~	-	-

• Pin connection

PIN NO.	1	2	3	4	5	6	7	8	9	10	11	12	13	14	15	16	17	18	19	20	21	22	23	24	25	26	27	28	29	30	31	32	33	34	35	36	37	38	39	40	41	42
CONNECTION	F1	F1	NP	NP	NP	NP	NP	NP	NP	NP	NP	NP	NP	NP	NP	NP	NP	NP	NP	1G	2G	3G	4G	5G	6G	7G	8G	9G	j	i	h	g	f	e	d	c	b	a	NP	NP	F2	F2

Note 1.)NP..... No pin.
2.)F1,F2..... Filament
3.)1G~9G..... Grid

SCHEMATIC DIAGRAM

(Parts list on pages 42, 43, 49 and 50)

(This schematic diagram may be modified at any time with development of new technology.)

- S1 : Power switch in "on" position.
- S2 : Voltage selector switch. (For [GC, PX] areas.)
- SW41 : SW block (S410-S418).
- SW42 : SW block (S401-S409).
- S401 : Play (play) switch.
- S402 : Pause (pause) switch.
- S403 : Stop (stop) switch.
- S404, 405 : Skip (skip) switch. [S404: F. SKIP, S405: B. SKIP]
- S406 : Program/continue (program/continue) switch.
- S407 ~ 411: Disc (disc 1 ~ 5) switches. [S407: 5, S408: 4, S409: 3, S410: 2, S411: 1]
- S412, 413 : Search (search) switches. [S412: F. SEARCH, S413: B. SEARCH]
- S414 : Auto link (auto link) switch.
- S415 : Edit tape length (tape length) switch.
- S416 : Time mode (time mode) switch.
- S417 : Repeat (repeat) switch.
- S418 : Random (random) switch.
- S419 : Disc skip (disc skip) switch.
- S451 : Clamp switch.

- The voltage value and waveforms are the reference voltage of this unit measured by DC electronic voltmeter (high impedance) and oscilloscope on the basis of chassis. Accordingly, there may arise some error in voltage values and waveforms depending upon the internal impedance of the tester or the measuring unit.
  ∗The parenthesized are the values of voltage generated during playing (Test disc 1kHz, L+R, 0dB), others are voltage values in stop mode.
- Important safety notice: Components identified by ⚠ mark have special characteristics important for safety. When replacing any of these components, use only manufacturer's specified parts.
- ———— / - - - - - - : Positive voltage lines and negative voltage lines.
  ▒▒▒▒ : audio signal lines.

Caution!
IC and LSI are sensitive to static electricity.
Secondary trouble can be prevented by taking care during repair.
- Cover the parts boxes made of plastics with aluminum foil.
- Ground the soldering iron.
- Put a conductive mat on the work table.
- Do not touch the pins of IC or LSI with fingers directly.

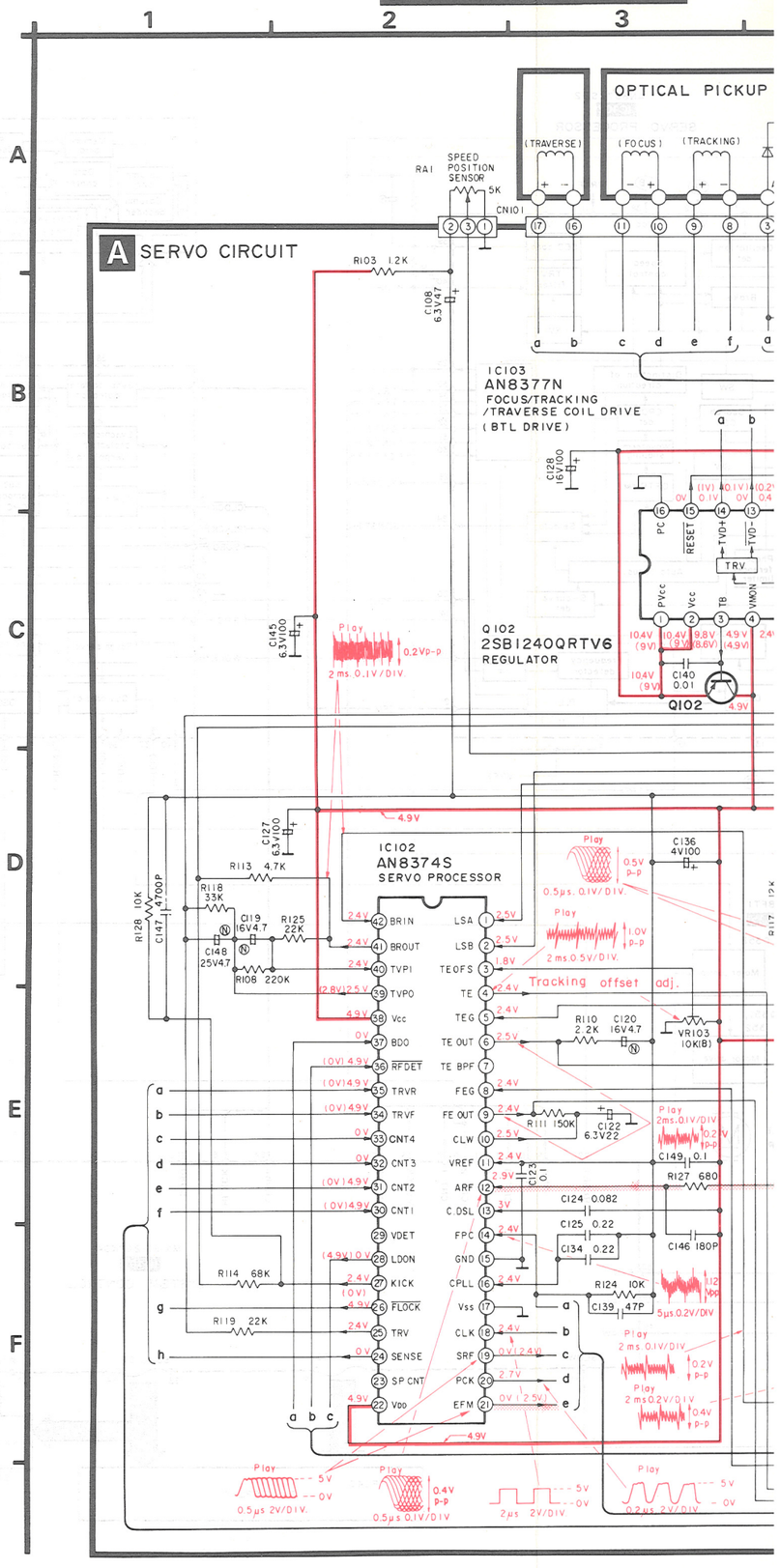

SCHEMATIC DIAGRAM

(Parts list on pages 42, 43, 49 and 50)

(This schematic diagram may be modified at any time with development of new technology.)

- **S1** : Power switch in "on" position.
- **S2** : Voltage selector switch. (For [GC, PX] areas.)
- **SW41** : SW block (S410-S418).
- **SW42** : SW block (S401-S409).
- **S401** : Play (play) switch.
- **S402** : Pause (pause) switch.
- **S403** : Stop (stop) switch.
- **S404, 405** : Skip (skip) switch.
  [S404: F. SKIP, S405: B. SKIP]
- **S406** : Program/continue (program/continue) switch.
- **S407 ~ 411**: Disc (disc 1 ~ 5) switches.
  [S407: 5, S408: 4, S409: 3, S410: 2, S411: 1]
- **S412, 413** : Search (search) switches.
  [S412: F. SEARCH, S413: B. SEARCH]
- **S414** : Auto link (auto link) switch.
- **S415** : Edit tape length (tape length) switch.
- **S416** : Time mode (time mode) switch.
- **S417** : Repeat (repeat) switch.
- **S418** : Random (random) switch.
- **S419** : Disc skip (disc skip) switch.
- **S451** : Clamp switch.

- The voltage value and waveforms are the reference voltage of this unit measured by DC electronic voltmeter (high impedance) and oscilloscope on the basis of chassis.
  Accordingly, there may arise some error in voltage values and waveforms depending upon the internal impedance of the tester or the measuring unit.
  ∗The parenthesized are the values of voltage generated during playing (Test disc 1kHz, L+R, 0dB), others are voltage values in stop mode.
- Important safety notice:
  Components identified by ⚠ mark have special characteristics important for safety. When replacing any of these components, use only manufacturer's specified parts.
- ——— / - - - - - : Positive voltage lines and negative voltage lines.
  ▒▒▒ : audio signal lines.

Caution!

IC and LSI are sensitive to static electricity.
Secondary trouble can be prevented by taking care during repair.

- Cover the parts boxes made of plastics with aluminum foil.
- Ground the soldering iron.
- Put a conductive mat on the work table.
- Do not touch the pins of IC or LSI with fingers directly.

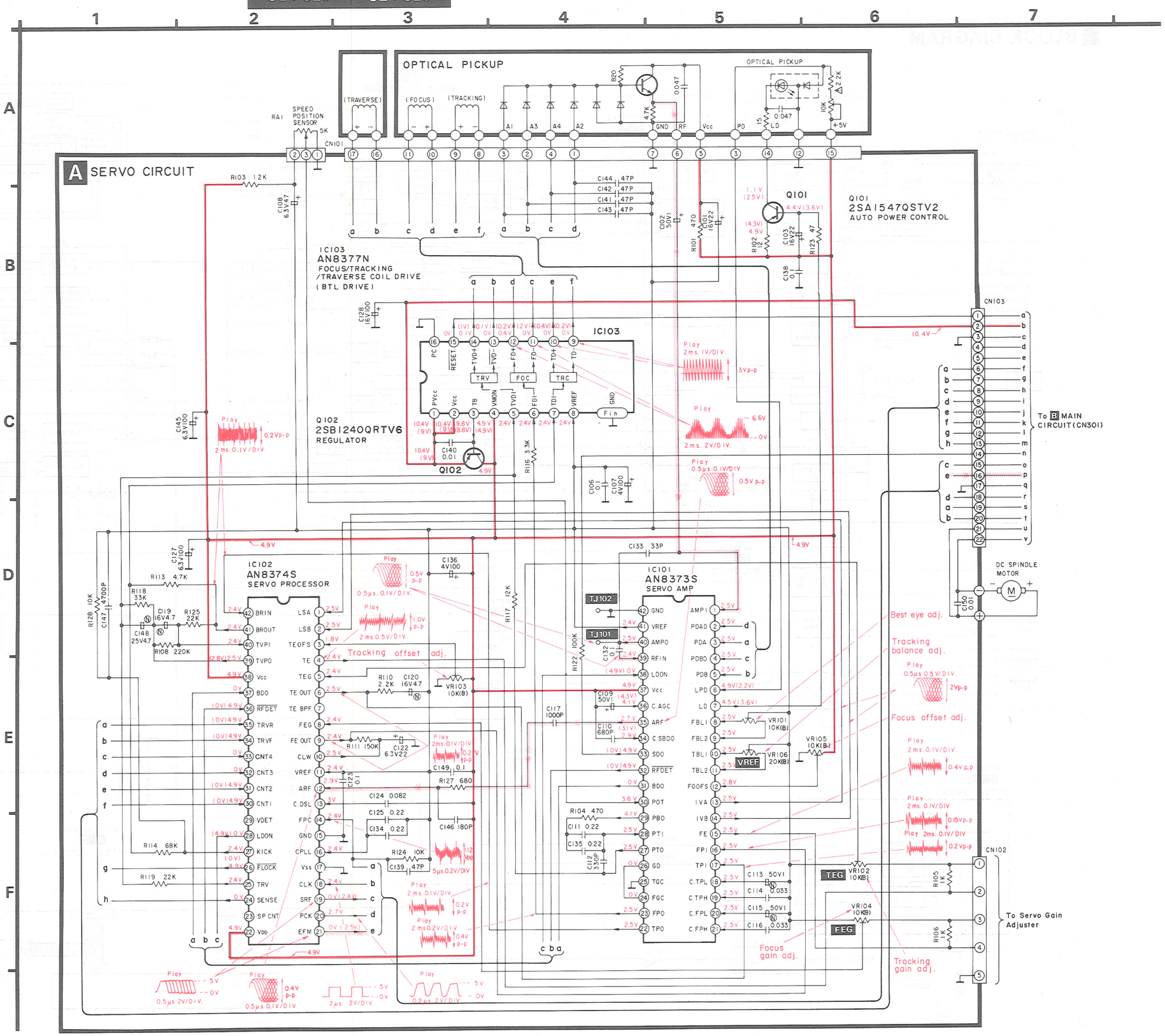

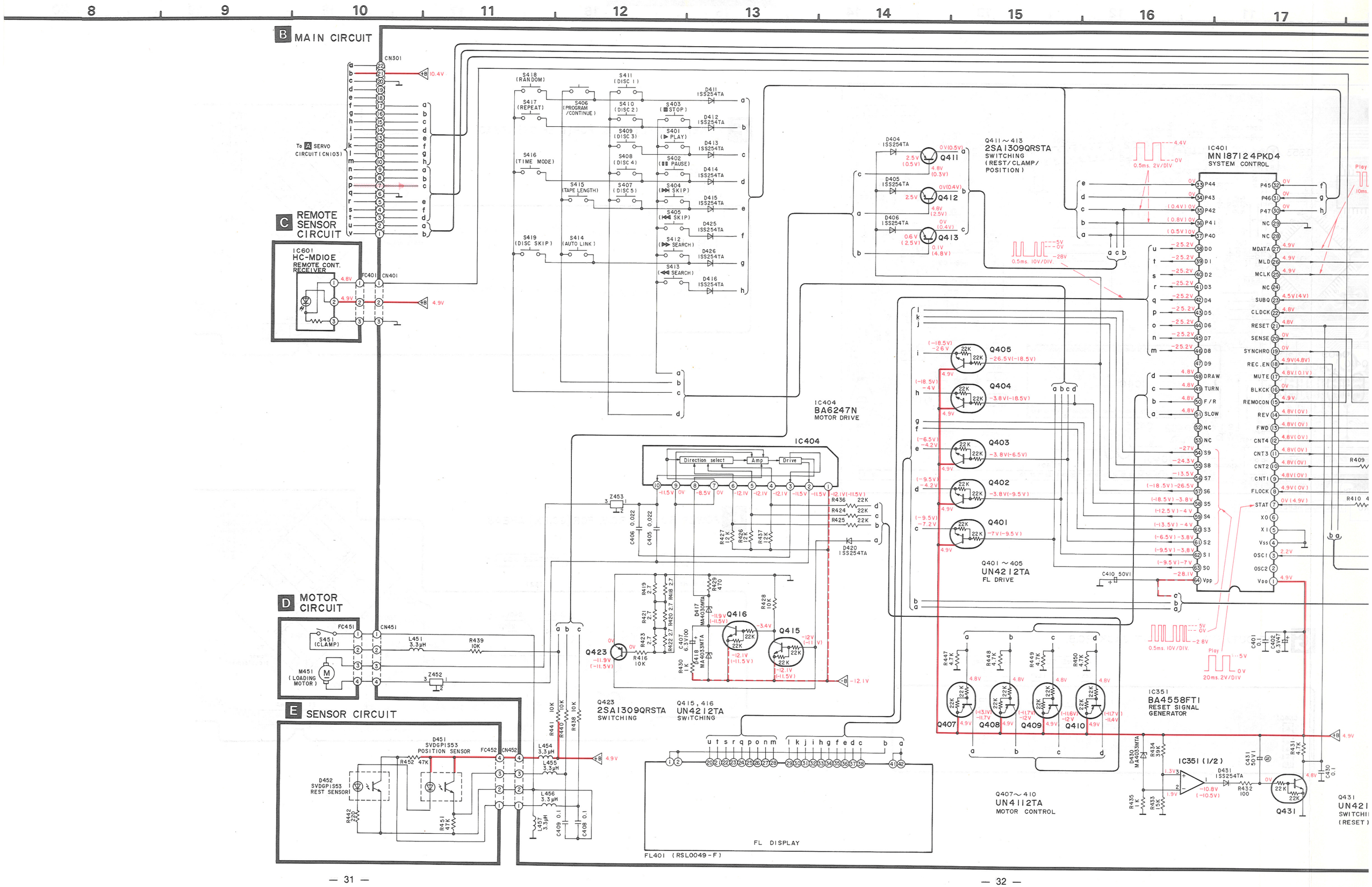

8
9
10
11
12
13
14
15
16
17
B MAIN CIRCUIT
CN301
To A SERVO CIRCUIT (CN103)
C REMOTE SENSOR CIRCUIT
IC601
HC-MD10E
REMOTE CONT. RECEIVER
FC401
CN401
D MOTOR CIRCUIT
FC451
CN451
S451 (CLAMP)
M451 (LOADING MOTOR)
E SENSOR CIRCUIT
D451
SVDGPIS53
POSITION SENSOR
FC452
CN452
D452
SVDGPIS53
REST SENSOR
S418 (RANDOM)
S417 (REPEAT)
S416 (TIME MODE)
S419 (DISC SKIP)
S406 (PROGRAM /CONTINUE)
S415 (TAPE LENGTH)
S414 (AUTO LINK)
S411 (DISC 1)
S410 (DISC 2)
S409 (DISC 3)
S408 (DISC 4)
S407 (DISC 5)
S403 (STOP)
S401 (PLAY)
S402 (PAUSE)
S404 (SKIP)
S405 (SKIP)
S412 (SEARCH)
S413 (SEARCH)
D411 1SS254TA
D412 1SS254TA
D413 1SS254TA
D414 1SS254TA
D415 1SS254TA
D425 1SS254TA
D426 1SS254TA
D416 1SS254TA
D404 1SS254TA
D405 1SS254TA
D406 1SS254TA
Q411 ~ 413
2SA1309QRSTA
SWITCHING
(REST/CLAMP/ POSITION)
IC401
MN187124PKD4
SYSTEM CONTROL
IC404
BA6247N
MOTOR DRIVE
Direction select
Amp
Drive
Q401 ~ 405
UN4212TA
FL DRIVE
Q423
2SA1309QRSTA
SWITCHING
Q415, 416
UN4212TA
SWITCHING
Q407 ~ 410
UN4112TA
MOTOR CONTROL
IC351
BA4558FT1
RESET SIGNAL GENERATOR
IC351 (1/2)
Q431
FL DISPLAY
FL401 (RSL0049-F)

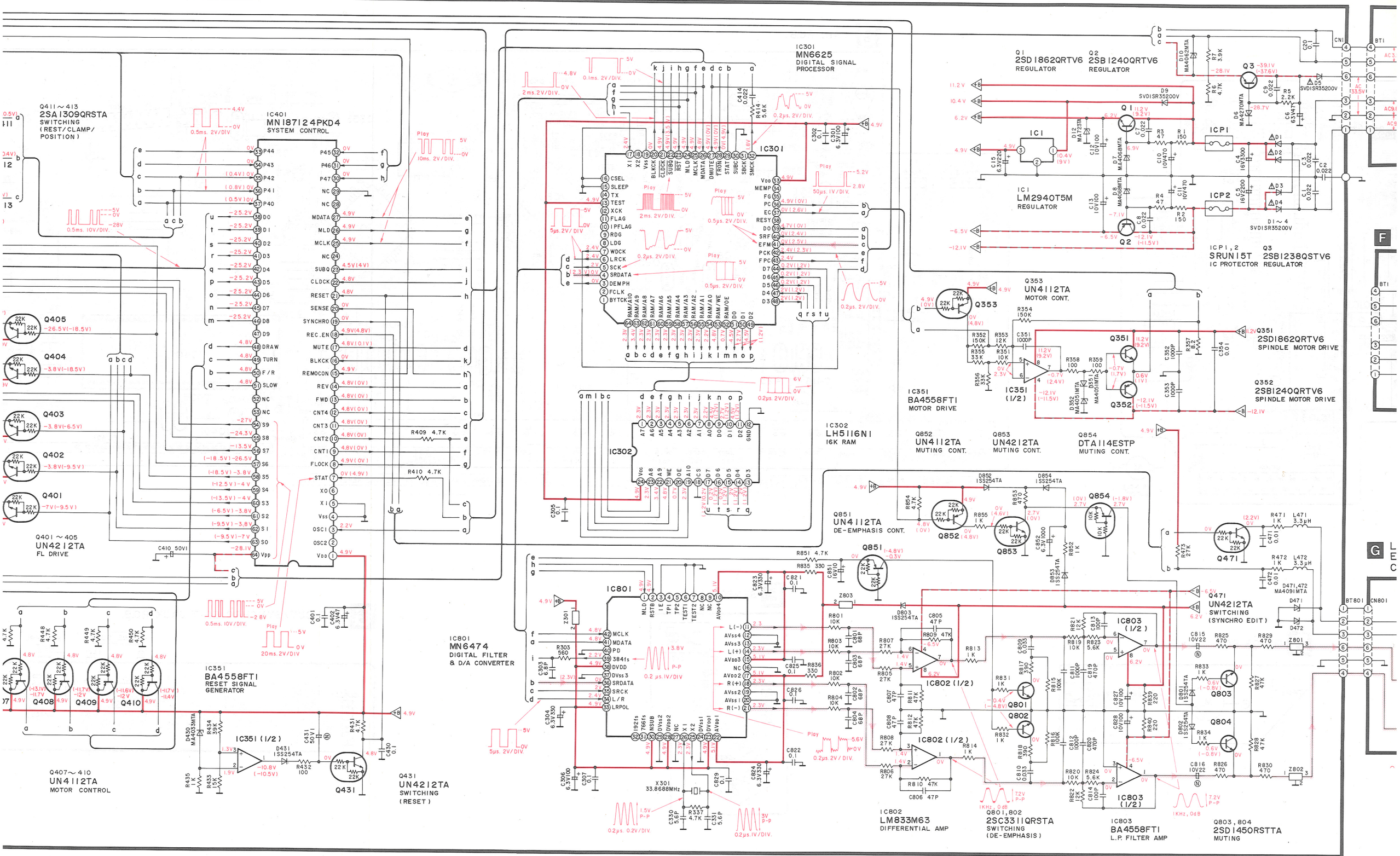
15
16
17
18
19
20
21
22
23
24
Q411～413
2SA1309QRSTA
SWITCHING
(REST/CLAMP/
POSITION)
IC401
MN187124PKD4
SYSTEM CONTROL
Q405
Q404
Q403
Q402
Q401
Q401～405
UN4212TA
FL DRIVE
IC301
MN6625
DIGITAL SIGNAL
PROCESSOR
IC302
LH5116N1
16K RAM
Q1
2SD1862QRTV6
REGULATOR
Q2
2SB1240QRTV6
REGULATOR
IC1
LM2940T5M
REGULATOR
ICP1,2
SRUN15T
IC PROTECTOR
Q3
2SB1238QSTV6
REGULATOR
D1～4
SVD1SR35200V
Q353
UN4112TA
MOTOR CONT.
IC351
BA4558FTI
MOTOR DRIVE
IC351
(1/2)
Q351
2SD1862QRTV6
SPINDLE MOTOR DRIVE
Q352
2SB1240QRTV6
SPINDLE MOTOR DRIVE
Q852
UN4112TA
MUTING CONT.
Q853
UN4212TA
MUTING CONT.
Q854
DTA114ESTP
MUTING CONT.
Q851
UN4112TA
DE-EMPHASIS CONT.
Q471
UN4212TA
SWITCHING
(SYNCHRO EDIT)
IC801
MN6474
DIGITAL FILTER
& D/A CONVERTER
IC351
BA4558FTI
RESET SIGNAL
GENERATOR
Q407～410
UN4112TA
MOTOR CONTROL
Q431
UN4212TA
SWITCHING
(RESET)
IC351 (1/2)
IC802 (1/2)
IC802
LM833M63
DIFFERENTIAL AMP
Q801,802
2SC3311QRSTA
SWITCHING
(DE-EMPHASIS)
IC803
(1/2)
IC803
BA4558FTI
L.P. FILTER AMP
Q803,804
2SD1450RSTTA
MUTING
Q408
Q409
Q410
Q801
Q802
Q803
Q804
Q431
F
G

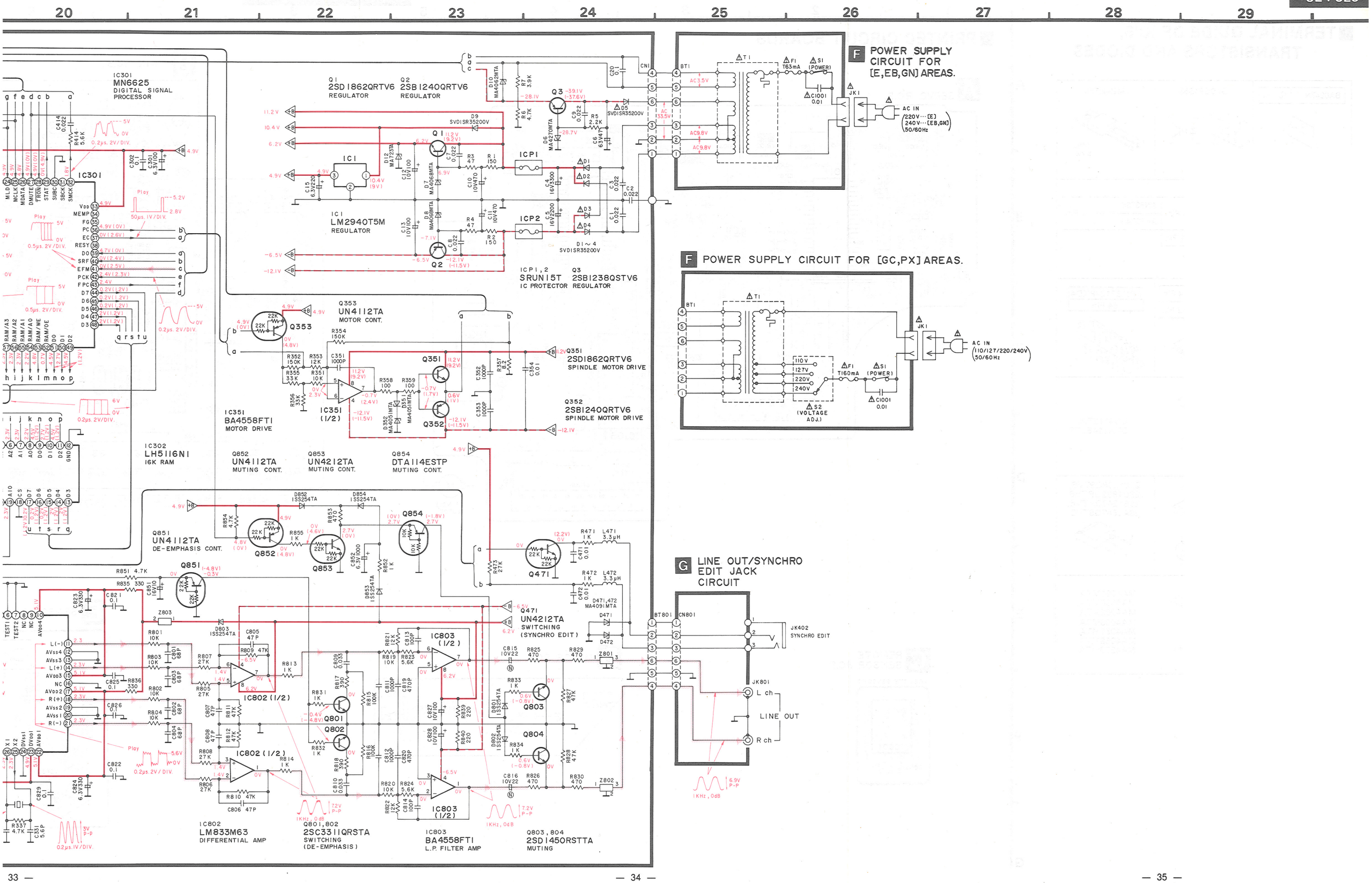
20
21
22
23
24
25
26
27
28
29
IC301
MN6625
DIGITAL SIGNAL PROCESSOR
IC302
LH5116N1
16K RAM
Q1
2SD1862QRTV6
REGULATOR
Q2
2SB1240QRTV6
REGULATOR
Q3
2SB1238QSTV6
REGULATOR
IC1
LM2940T5M
REGULATOR
ICP1, 2
SRUN15T
IC PROTECTOR
Q353
UN4112TA
MOTOR CONT.
IC351
BA4558FTI
MOTOR DRIVE
IC351 (1/2)
Q351
2SD1862QRTV6
SPINDLE MOTOR DRIVE
Q352
2SB1240QRTV6
SPINDLE MOTOR DRIVE
Q852
UN4112TA
MUTING CONT.
Q853
UN4212TA
MUTING CONT.
Q854
DTA114ESTP
MUTING CONT.
Q851
UN4112TA
DE-EMPHASIS CONT.
Q471
UN4212TA
SWITCHING (SYNCHRO EDIT)
IC802
LM833M63
DIFFERENTIAL AMP
Q801, 802
2SC3311QRSTA
SWITCHING (DE-EMPHASIS)
IC803
BA4558FTI
L.P. FILTER AMP
Q803, 804
2SD1450RSTTA
MUTING
F POWER SUPPLY CIRCUIT FOR [E,EB,GN] AREAS.
AC IN
(220V···[E]
240V···[EB,GN])
(50/60Hz)
F POWER SUPPLY CIRCUIT FOR [GC,PX] AREAS.
AC IN
(110/127/220/240V)
(50/60Hz)
G LINE OUT/SYNCHRO EDIT JACK CIRCUIT
JK402
SYNCHRO EDIT
JK801
L ch
LINE OUT
R ch

TERMINAL GUIDE OF IC'S, TRANSISTORS AND DIODES

BA6247N — 10 Pin	SVDGP1S53	LM2940T5M
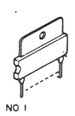	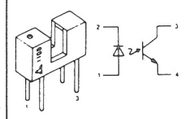	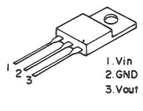 1. Vin 2. GND 3. Vout
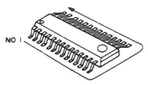	LM833M63, BA4558FTI, LH5116N3 — 8 Pin; AN8373S, AN8374S — 42 Pin; LH5116N3 — 24 Pin	
AN8377N — 16 Pin	MN6625 — 64 Pin; MN6474 — 42 Pin	MN187124PKD4 — 64 Pin
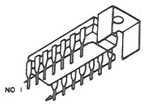	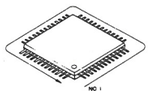	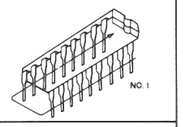
SRUN15T	UN4112TA, DTA114ESTP	
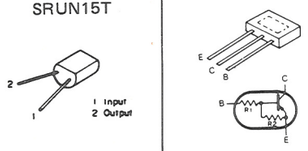 1. Input 2. Output		
2SD1450RSTTA, 2SC3311QRSTA, 2SA1309QRSTA	UN4212TA	2SB1238QSTV6, 2SD1862QRTV6, 2SB1240QRTV6, 2SA1547QSTV2
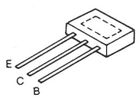	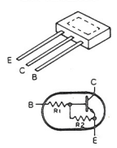	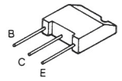
SVD1SR35200V, MA723TA, 1SS254TA		MA4091MTA, MA4030MTA, MA4062MTA, MA4033MTA, MA4051MTA, MA4068MTA, MA4270MTA
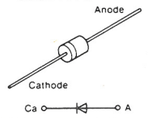	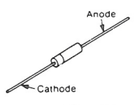	

PRINTED CIRCUIT BOARDS

A SERVO P.C.B.

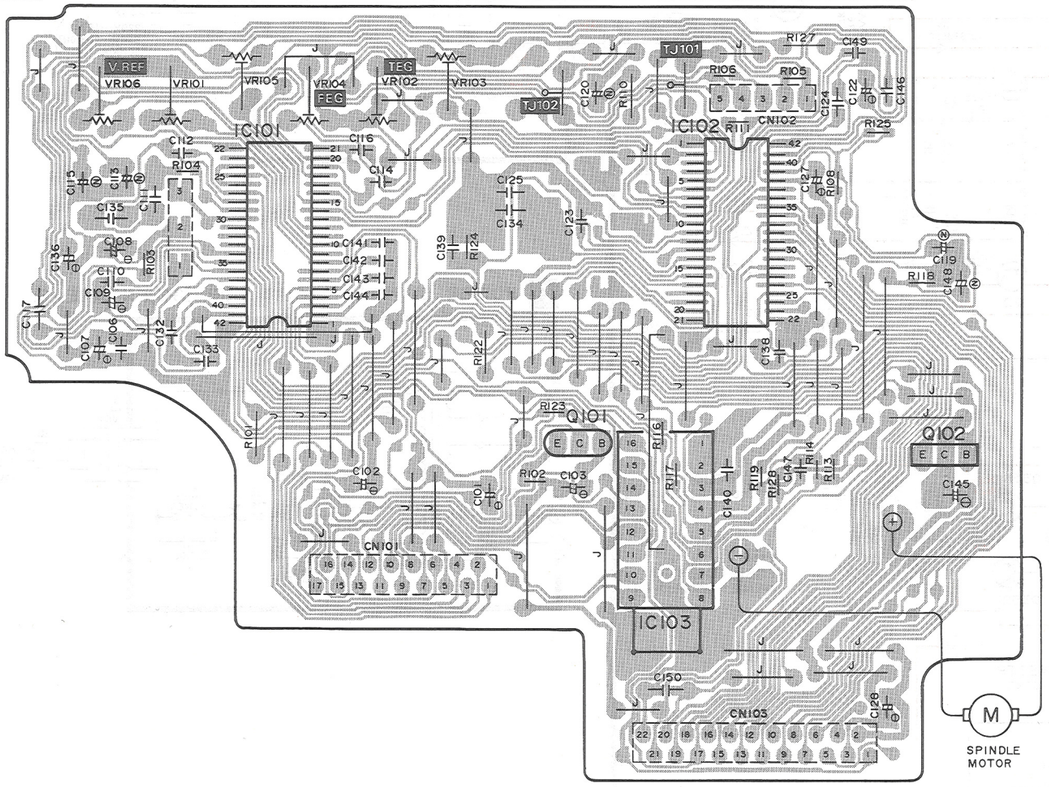

B MAIN P.C.B.

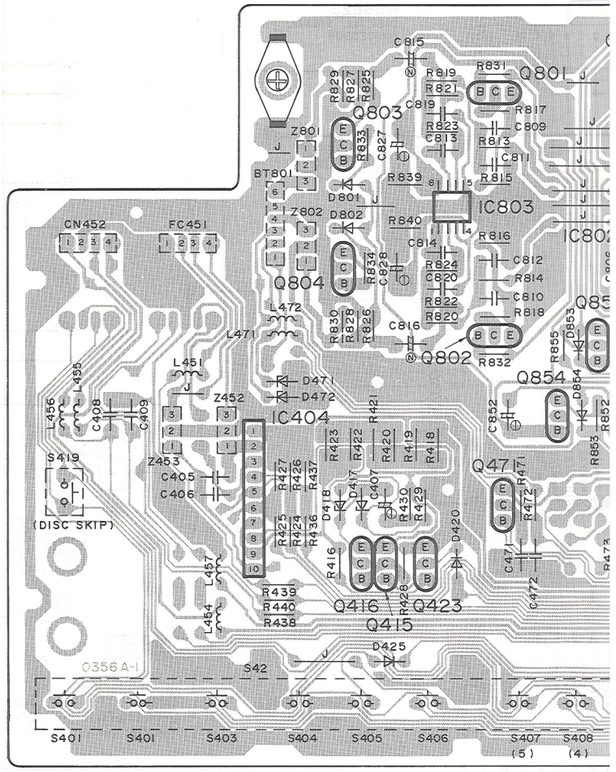

C REMOTE SENSOR P.C.B.

(REMOTE SENSOR)

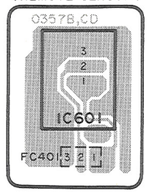

D MOTOR P.C.B.

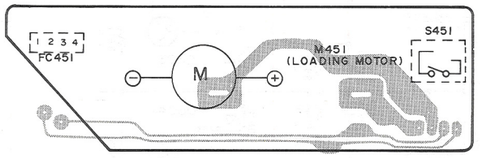

E SENSOR P.C.B.

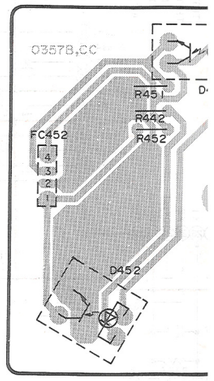

B MAIN P.C.B.

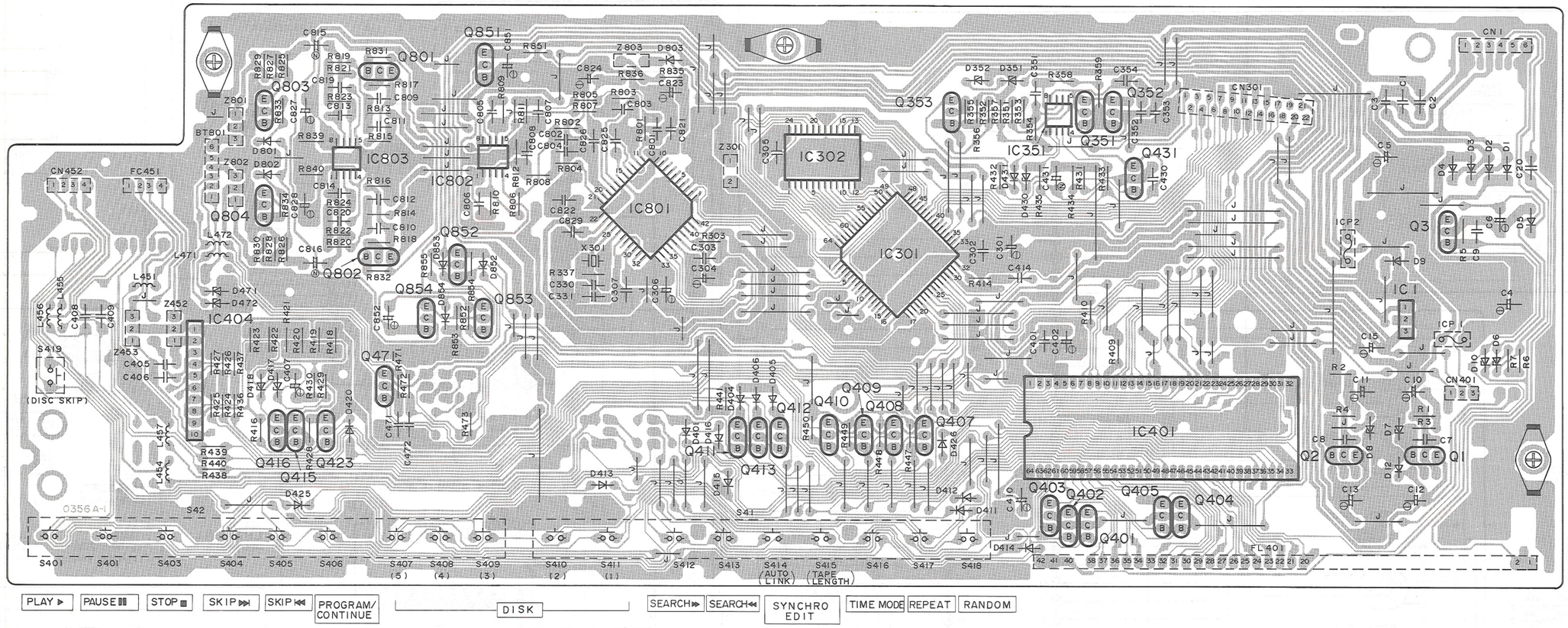

E SENSOR P.C.B.

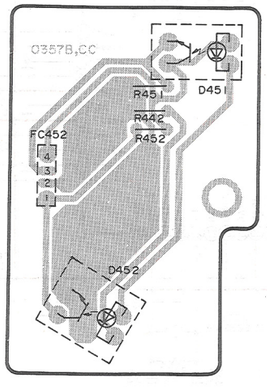

G LINE OUT/SYNCHRO EDIT JACK P.C.B.

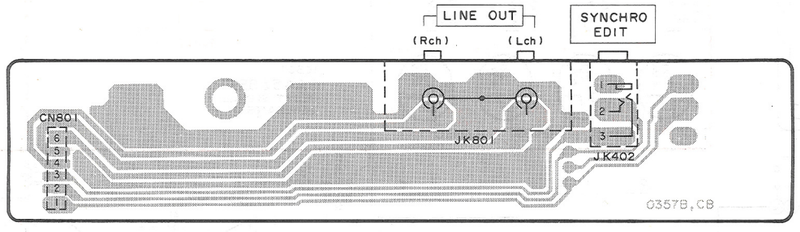

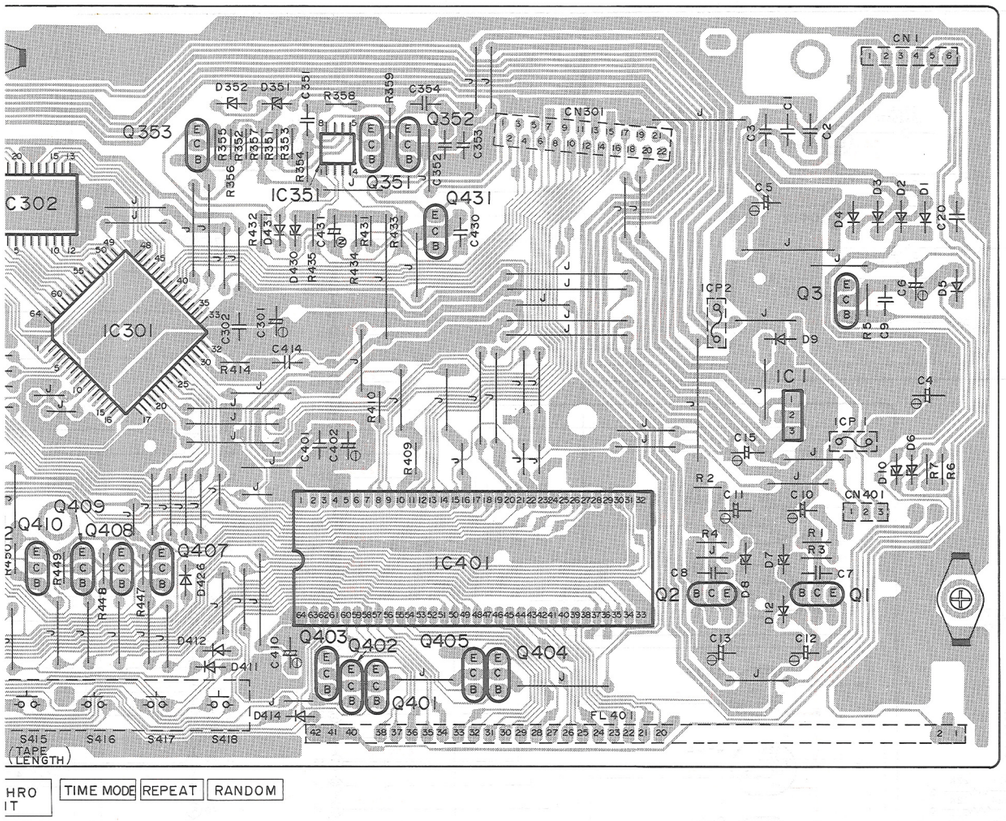

F POWER SUPPLY P.C.B. FOR (E,EB,GN) AREAS.

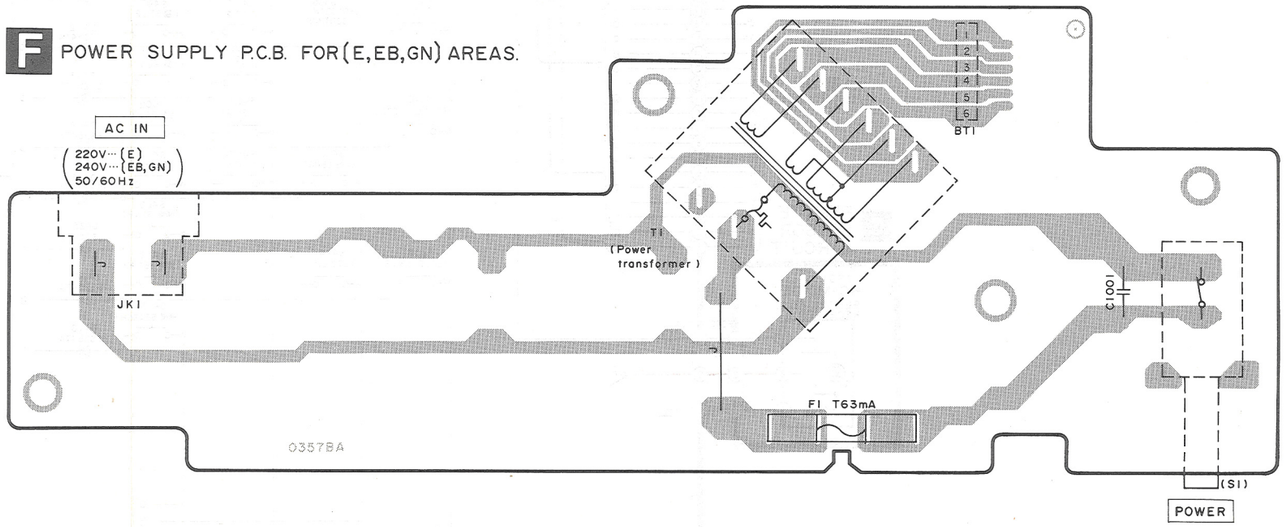

F POWER SUPPLY P.C.B. FOR (GC,PX) AREAS.

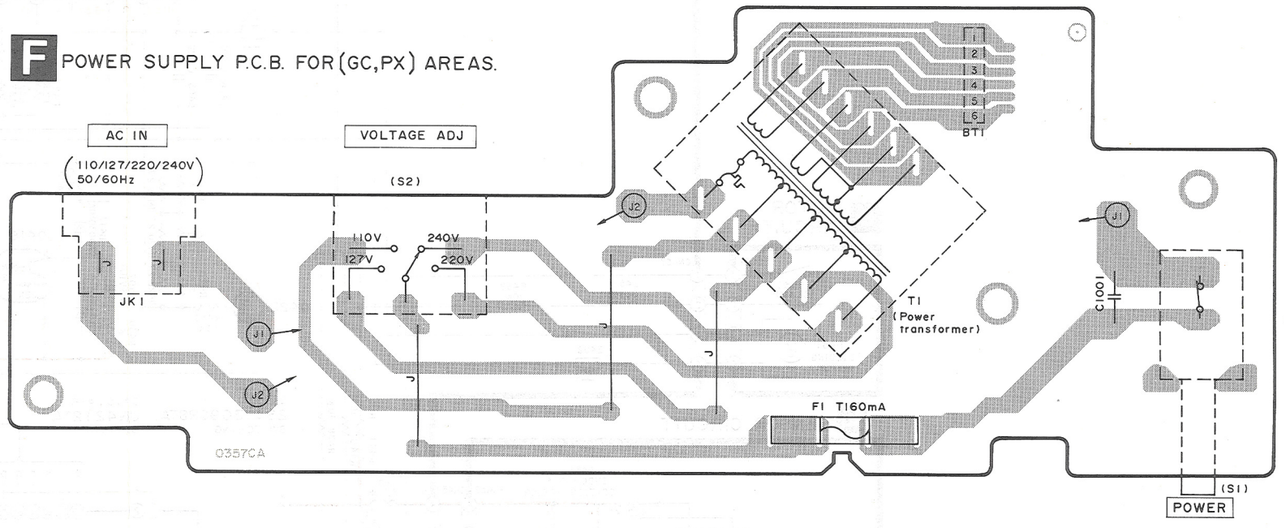

G LINE OUT/SYNCHRO EDIT JACK P.C.B.

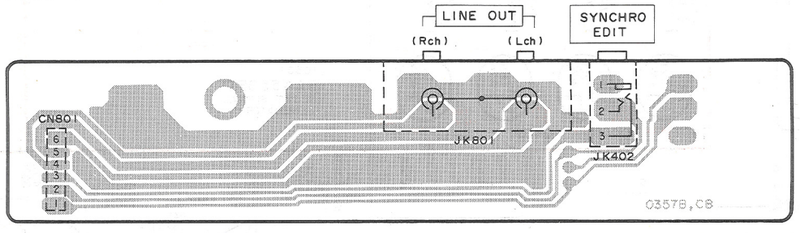

WIRING CONNECTION DIAGRAM

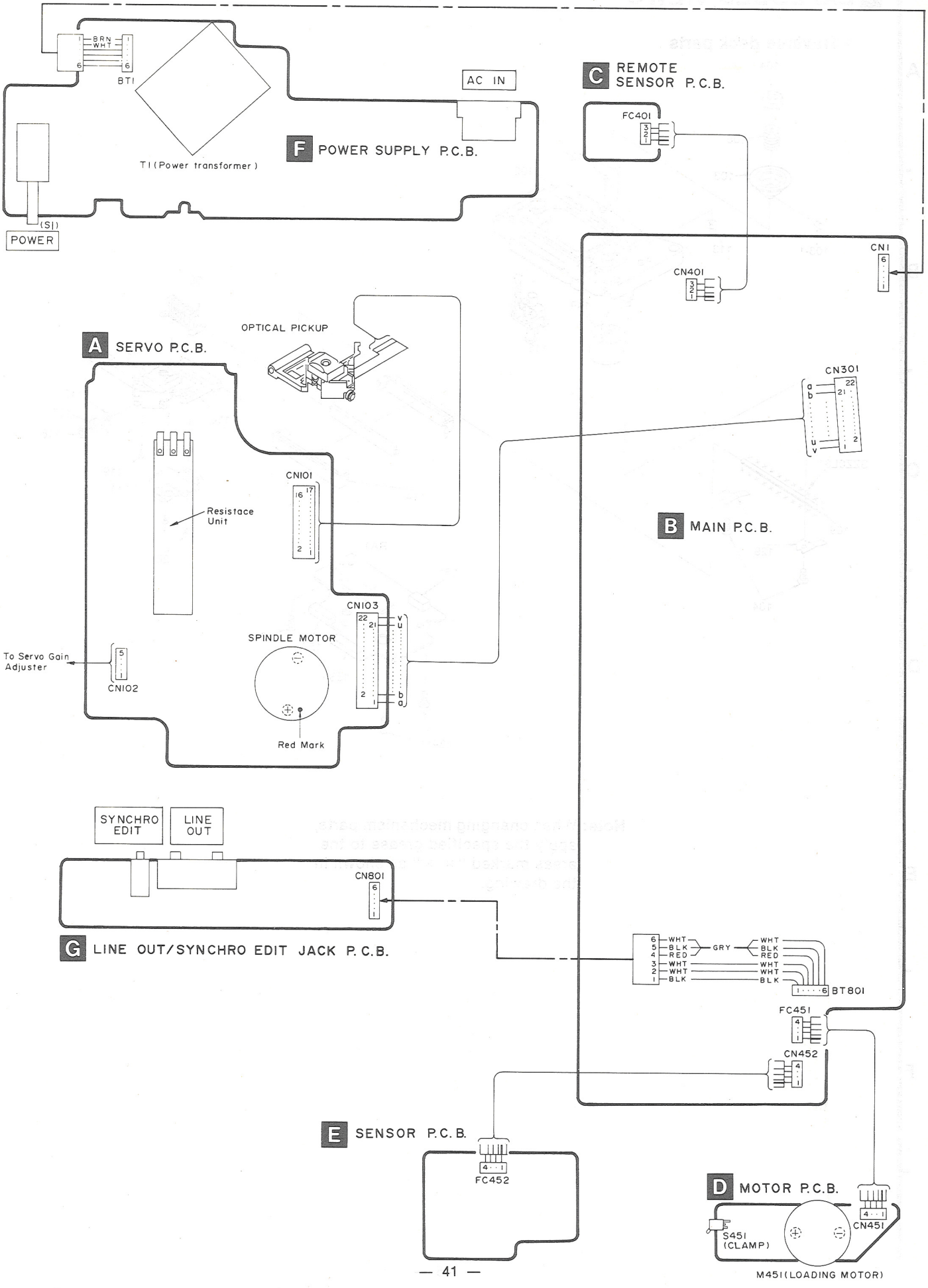

REPLACEMENT PARTS LIST

Notes : * Important safety notice:
Components identified by ⚠ mark have special characteristics important for safety. When replacing any of these components use only manufacturer's specified parts.
* The parenthesized indications in the Remarks columns specify the areas. (Refer to the cover page for area.) Parts without these indications can be used for all areas.
* Warning: This product uses a laser diode. Refer to caution statements on page 3.
* ACHTUNG:
Die lasereinheit nicht zerlegen.
Die lasereinheit darf nur gegen eine vom hersteller spezifizierte einheit ausgetauscht werden.

Ref. No.	Part No.	Part Name & Description	Remarks
		INTEGRATED CIRCUIT(S)	
IC1	LM2940T5	IC, REGULATOR	
IC301	MN6625	IC, DIGITAL SIGNAL PROCESSOR	
IC302	LH5116N3	IC, 16K RAM	
IC351	SVIBA4558F	IC, MOTOR DRIVE&RESET	
IC401	MN187124PKD4	IC, SYSTEM CONTROL	
IC404	BA6247N	IC, MOTOR DRIVE	
IC601	HC-MD10E	IC, REMOTE CONTROL RECEIVER	
IC801	MN6474	IC, DIF&D/A CONVERTER	
IC802	LM833M63	IC, DIFFERENTIAL AMP	
IC803	SVIBA4558F	IC, L. P. F.	
		IC PROTECTOR(S)	
ICP1, 2	SRUN15	IC PROTECTOR	
		TRANSISTOR(S)	
Q1	2SD1862QRTV6	TRANSISTOR	
Q2	2SB1240-P	TRANSISTOR	
Q3	2SB1238QSTV6	TRANSISTOR	
Q351	2SD1862QRTV6	TRANSISTOR	
Q352	2SB1240-P	TRANSISTOR	
Q353	UN4112	TRANSISTOR	
Q401-405	UN4212TA	TRANSISTOR	
Q407-410	UN4112	TRANSISTOR	
Q411-413	2SA1309A-R	TRANSISTOR	
Q415, 416	UN4212TA	TRANSISTOR	
Q423	2SA1309A-R	TRANSISTOR	
Q431	UN4212TA	TRANSISTOR	
Q471	UN4212TA	TRANSISTOR	
Q801, 802	2SC3311A-Q	TRANSISTOR	
Q803, 804	2SD1450RTA	TRANSISTOR	
Q851, 852	UN4112	TRANSISTOR	
Q853	UN4212TA	TRANSISTOR	
Q854	DTA114ESTP	TRANSISTOR	
		DIODE(S)	
D1-5	SVD1SR35200A	DIODE	⚠
D6	MA4270	DIODE	
D7, 8	MA4068M	DIODE	
D9	SVD1SR35200A	DIODE	
D10	MA4062MTA	DIODE	
D12	MA723TA	DIODE	

Ref. No.	Part No.	Part Name & Description	Remarks
D351, 352	MA4051MTA	DIODE	
D404-406	1SS254TA	DIODE	
D411-416	1SS254TA	DIODE	
D417	MA4030MTA	DIODE	
D418	MA4033TA	DIODE	
D420	1SS254TA	DIODE	
D425, 426	1SS254TA	DIODE	
D430	MA4033TA	DIODE	
D431	1SS254TA	DIODE	
D451, 452	SVDGP1S53	PHOTO COUPLER	
D471, 472	MA4091-M	DIODE	
D801-803	1SS254TA	DIODE	
D852-854	1SS254TA	DIODE	
		COMPONENT COMBINATION(S)	
Z301	EXCELDR35V	COMBINATION PART	
Z452, 453	DSS36431B102	COMBINATION PART	
Z801, 802	DSS36431B102	COMBINATION PART	
Z803	EXCELDR35V	COMBINATION PART	
		COIL(S)	
L451	RLQZP3R3KT-Y	COIL	
L454-457	RLQZP3R3KT-Y	COIL	
L471, 472	RLQZP3R3KT-Y	COIL	
		TRANSFORMER(S)	
T1	RTP1K4E007-V	POWER TRANSFORMER	⚠(E)
T1	RTP1K4B006-V	POWER TRANSFORMER	⚠(EB, GN)
T1	RTP1K4G002-V	POWER TRANSFORMER	⚠(GC, PX)
		FUSE(S)	
F1	XBA2C006TB0	FUSE, 250V T63mA	⚠(E, EB, GN)
F1	XBA2C016TB0	FUSE, 250V, T160mA	⚠(GC, PX)
		OSCILLATOR(S)	
X301	SVQ49U338S	OSCILLATOR	
		DISPLAY TUBE	
FL401	RSL0049-F	DISPLAY TUBE	
		SWITCH(ES)	

Ref. No.	Part No.	Part Name & Description	Remarks
S1	ESB8249V	SW, POWER	⚠
S2	SSR187-1	SW, VOLTAGE SELECTOR	⚠(GC, PX)
S419	EVQ21405R	SW, DISK SKIP	
S451	SSPD12	SW, CLAMP	
SW41	RMN0067	SWITCH BLOCK(9) S410-418	
SW42	RMN0068	SWITCH BLOCK(9) S401-409	
		CABLE(S)	
BT1	REX0165	FLAT CABLE	
BT801	REX0194	FLAT CABLE	
		CONNECTOR(S)	
CN1	EMCS0660MT6	CONNECTOR(6P)	
CN301	SJSD2221	CONNECTOR(22P)	
CN401	SJSD0305	CONNECTOR(3P)	
CN451	RJS4T7ZA	CONNECTOR(4P)	
CN452	SJSD0405	CONNECTOR(4P)	
CN801	RJP6G28ZA	CONNECTOR(6P)	
FC401	REZ0222	FLAT CABLE	
FC451	REX0029-1	FLAT CABLE	
FC452	REZ0011	FLAT CABLE	
		HOLDER	
K401	RMN0014-1	FL HOLDER	
		JACKS	
JK1	SJS9236	AC INLET	⚠(E, EB, GC, PX)
JK1	SJSD16	AC INLET	⚠(GN)
JK402	RJJ33T01	SYNCHRO EDIT	
JK801	RJH3201N	LINE OUT	
		<SERVO P. C. B>	
		INTEGRATED CIRCUITS	
IC101	AN8373S	IC, SERVO AMP	
IC102	AN8374S	IC, SERVO PROCESSOR	
IC103	AN8377N	IC, B. T. L DRIVE	
		TRANSISTORS	
Q101	2SA1547QSTV2	TRANSISTOR	
Q102	2SB1240—P	TRANSISTOR	
		VARIABLE RESISTORS	
VR101	EVND3AA00B14	V. R, BEST EYE ADJ.	
VR102	EVND3AA00B14	V. R, TRACKING GAIN ADJ.	

Ref. No.	Part No.	Part Name & Description	Remarks
VR103	EVND3AA00B14	V. R, TRACKING OFFSET ADJ.	
VR104	EVND3AA00B14	V. R, FOCUS GAIN ADJ.	
VR105	EVND3AA00B14	V. R, FOCUS OFFSET ADJ.	
VR106	EVND3AA00B24	V. R, TRACKING BALANCE ADJ.	
		MAGNET RESISTOR ELEMENTS	
RA1	EWS7M0A00Q53	RESISTANCE UNIT	

Ref. No.	Part No.	Part Name & Description	Remarks
		CABINET AND CHASSIS	
1	RKC0002	HINGE	
2	REZ0218	FLAT CABLE(22P)	
3	RGK0060	FOOT	
4	RFKKLPC25E-K	CABINET ASS'Y	(E)
4	RFKKLPC25EBK	CABINET ASS'Y	(EB, GN)
4	RFKKLPC25GCK	CABINET ASS'Y	(GC)
4	RFKKLPC25PXK	CABINET ASS'Y	(PX)
5	RGQ0012A	CLAMP COVER	
6	RGT0001	ROTARY TRAY	
7	RGU0030	BUTTON, POWER	
8	RGU0073	BUTTON, SKIP	
9	RGU0388A-1	BUTTON, MAIN	
10	RGU0389A	BUTTON, SUB	
11	RKQ0007	VOLUME COVER	
12	RKQ0008	TRAY HOLDER	
13	RMA0062	EARTH PLATE	
14	RMA0305-1	HOLDER, MAIN BUTTON	
15	RMA0306	HOLDER, SUB BUTTON	
16	RMC0079	EARTH PLATE	
17	RME0027	LOCK LEVER SPRING	
18	RME0028	SET LEVER SPRING	
19	RML0048-2	LOCK LEVER	
20	RMM0015	POWER BUTTON ROD	
21	RMA0059	CLAMP PLATE	
22	RMR0098-1	CLAMPER	
23	SOMD8	MAGNET	
24	SOYD2	YOKE	
25	RXL0008-1	SET LEVER ASS'Y	
26	RKU0004-4	BOTTOM BOARD	
27	RSC0031-1	SHIELD PLATE	
28	SHG3020	FOOT RUBBER	
29	SHRD170	COVER, REMOTE CONTROL SENSOR	
30	RYF0082	DUST COVER	
31	RMG0146	RUBBER CUSHION	
32	RMS0228	GUIDE SHAFT	
33	RMB0037	GUIDE SPRING	
34	RMG0091	CUSHION RUBBER	
35	RMK0098	GUIDE PLATE	
36	RMR0079-1	TRAVERSE SPACER	
37	RMS0229	ROLLER SHAFT	
38	SHGD153-1	FLOATING RUBBER	
39	SUSD136-3	FLOATING SPRING A	
40	SUSD137-1	FLOATING SPRING B	
41	SUSD145-1	FLOATING SPRING C	
42	XUC3FY	E. RING	
43	RFKPLPC362PK	MOTOR ASS'Y (M451)	
44	RDG0035-1	MAIN GEAR	
45	RDG0037	DRIVE GEAR	
46	RDG0130	PULLEY GEAR	

Ref. No.	Part No.	Part Name & Description	Remarks
47	RDK0009	ELEVATOR CAM	
48	RMC0007	CONTROL SPRING	
49	RMQ0155	GUIDE SHAFT BASE	
50	RXK0086	MECH. CHASSIS ASS'Y	
51	RXL0009	MAIN ARM ASS'Y	
51-1	RDG0036	COMPONENT GEAR	
51-2	RMB0036-1	SPRING	
51-3	RXL0010	MAIN ARM	
51-4	SHWD27	WASHER	
52	RMK0029-2	SW INSTALLATION HOLDER	
53	RML0044-1	SW LEVER	
54	SMBD6	BELT	
55	SJT388	FUSE HOLDER	
		SCREWS	
N1	XTB3+8JFZ	SCREW	
N2	XTB3+10JFZ	SCREW	
N3	XTB3+14J	SCREW	
N4	XTB3+8G	SCREW	
N5	XTW3+8T	SCREW	
N6	XYN3+F8	SCREW	
N7	RHD30004	SCREW	
N8	RHD30005	SCREW	
N9	XYN26+C4	SCREW	
		CABINET <TRVERSE DECK>	
102	SISD22-1	TRAVERSE BASE	
103	SDOD28-1E	TURNTABLE	
103-1	XXE26D5	SCREW	
104	SDOD29-2	RING	
106	SRQA010N04	SPRING	
107	SORD37	ROLLER	
108	SORD38-E	COIL	
109	SUXD123-1	GUIDE SHAFT	
110	SOAD70A	OPTICAL PICKUP	⚠
111	SHRD176-E	COIL HOLDER	
113	SHGD148	STOPPER	
114	SOYD21-E	YOKE	
115	SOYD22	YOKE	
116	SHRD177-1	LOCK UNIT	
117	SHWD33	WASHER	
118	SHWD34	WASHER	
119	SNSD31	SCREW	
120	XTN2+5G	SCREW	
121	XYN2+C8	SCREW	
129	SUWD112	GUIDE SHAFT HOLDER	
134	XTB3+10G	SCREW	
149	SJGDRF310T-2	SPINDLE MOTOR	
157	SJSD1722M	SOCKET(17P)	
158	SJSD2222M	SOCKET(22P)	

Ref. No.	Part No.	Part Name & Description	Remarks
161	EMCS0552MP	CONNECTOR(5P)	
		PACKING MATERIAL	
P1	RPG0624	PACKING CASE	(E, EB, GC, GN)
P1	RPG0491	PACKING CASE	(PX)
P2	RPN0338A	PAD(FRONT)	
P3	RPN0338B	PAD(BACK)	
P5	RPQ0017-3	CLAMPER	
P6	SPB1061	PROTECTION BAG(F. B.)	
P7	RPF0024	PROTECTION BAG(DUST COVER)	
P8	XZB26X17C03	PROTECTION BAG(CORD)	
P9	XZB60X60A01	PROTECTION BAG(UNIT)	
		ACCESSORIES	
A1	RFKSLPC25E-K	INST. MANUAL ASS'Y	(E)
A1	RQT0665-B	INSTRUCTION MANUAL	(EB)
A1	RQT0666-G	INSTRUCTION MANUAL	(GC, GN)
A1	RQT0502-P	INSTRUCTION MANUAL	(PX)
A2	RQA0013	WARRANTY CARD	(E, EB, GC)
A2	SQX7186	WARRANTY CARD	(GN)
A2	SQX7071-1	WARRANTY CARD	(PX)
A3	SJA187	POWER CORD	⚠(E)
A3	SJA193	POWER CORD	⚠(EB)
A3	RJA0004	POWER CORD	⚠(GC, PX)
A3	SJA173	POWER CORD	⚠(GN)
A4	SJP2249-3	STEREO CONNECTION CABLE	
A5	EUR64789B	REMOTE CONTROL TRANSMITTER	
A6	UR64EC804	BATTERY COVER	
A7	RQCA0024	CAUTION CARD	
A8	RYF0082	DUST COVER	
A9	SJP9215	AC PLUG ADAPTOR	⚠(GC, PX)

EXPLODED VIEWS

• **Traverse deck parts**

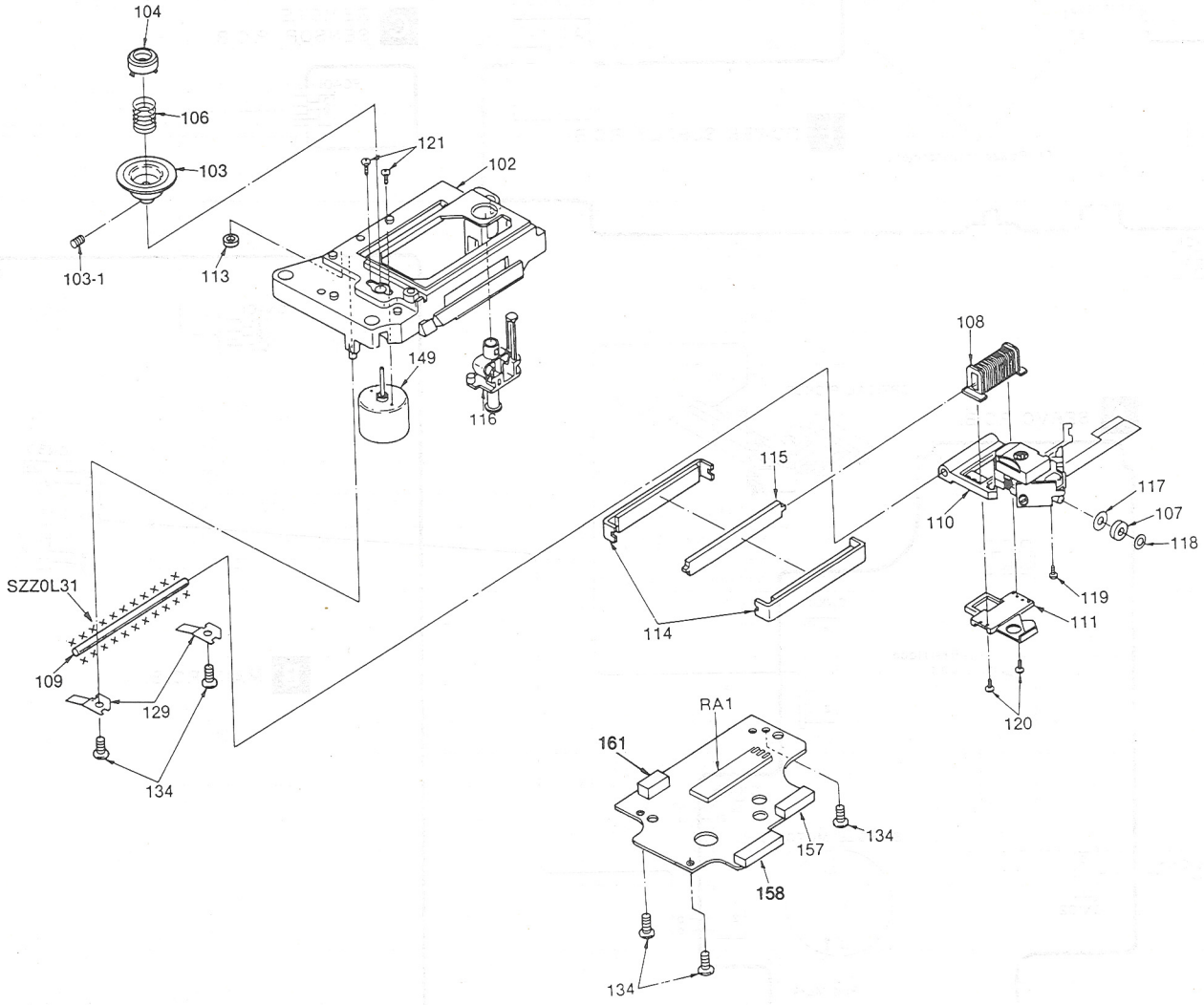

Note: When changing mechanism parts, apply the specified grease to the areas marked "× ×" as shown in the drawing.

6 7 8 9 10 11 12 13 14 15

● Cabinet and chassis parts

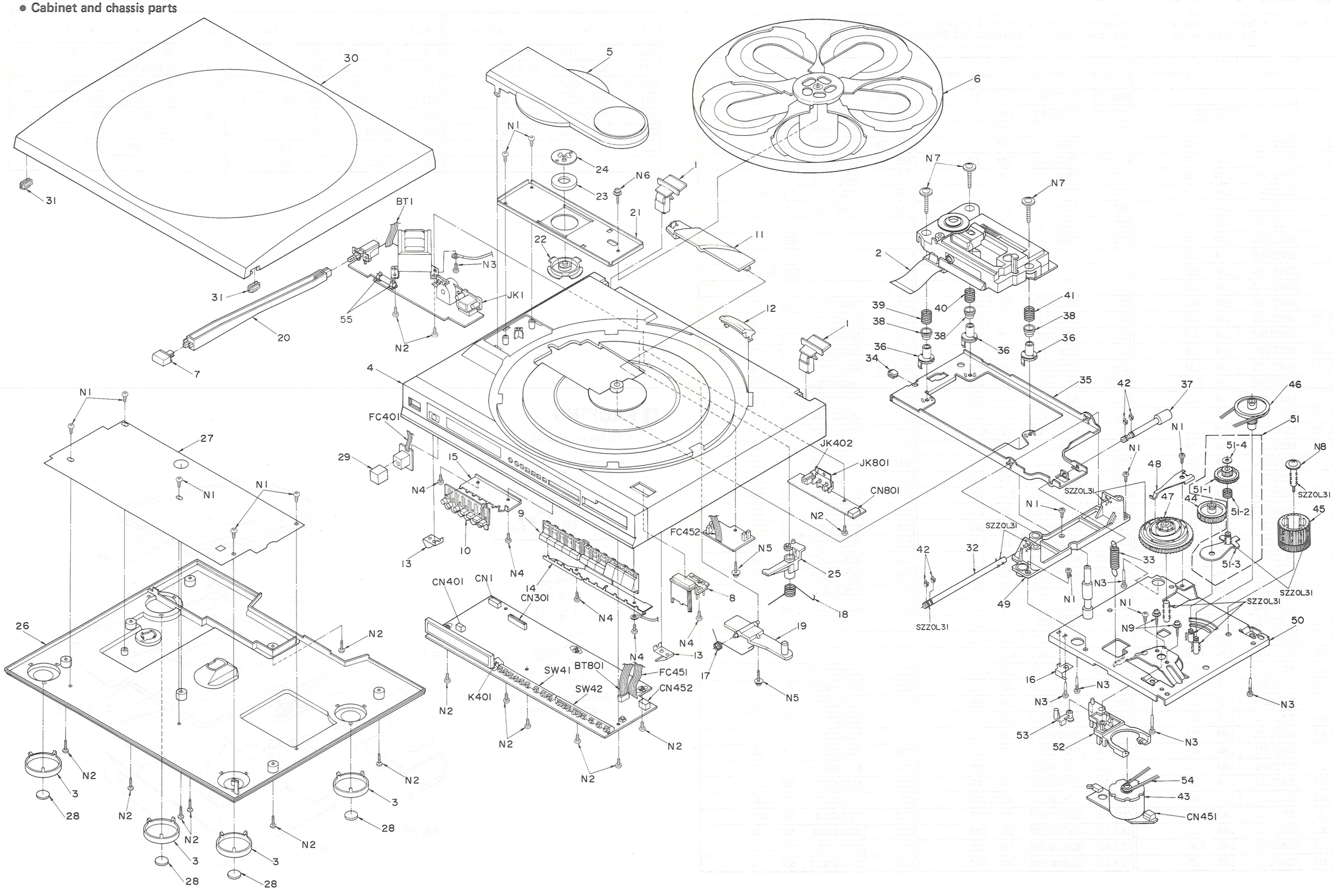

RESISTORS & CAPACITORS

Notes : * Capacity valuse are in microfarads (uF) unless specified otherwise, P=Pico-farads (pF) F=Farads (F)
* Resistance values are in ohms, unless specified otherwise, 1K=1,000 (OHM) , 1M=1,000k (OHM)

Ref. No.	Part No.	Values & Remarks
		RESISTORS
R1, 2	ERDS2TJ151	1/4W 150
R3, 4	ERDS2TJ470	1/4W 47
R5	ERDS2TJ222	1/4W 2.2K
R6	ERDS2TJ472	1/4W 4.7K
R7	ERDS2TJ392T	1/4W 3.9K
R303	ERDS2TJ561	1/4W 560
R337	ERDS2TJ472	1/4W 4.7K
R351	ERDS2TJ103	1/4W 10K
R352	ERDS2TJ154	1/4W 150K
R353	ERDS2TJ123	1/4W 12K
R354	ERDS2TJ154	1/4W 150K
R355, 356	ERDS2TJ333	1/4W 33K
R357	ERDS2TJ8R2T	1/4W 8.2
R358, 359	ERDS2TJ101	1/4W 100
R409, 410	ERDS2TJ472	1/4W 4.7K
R414	ERDS2TJ562	1/4W 5.6K
R416	ERDS2TJ103	1/4W 10K
R418-423	ERDS2TJ2R7T	1/4W 2.7
R424, 425	ERDS2TJ223	1/4W 22K
R426, 427	ERDS2TJ123	1/4W 12K
R428	ERDS2TJ103	1/4W 10K
R429	ERDS2TJ471	1/4W 470
R430	ERDS2TJ102	1/4W 1K
R431	ERDS2TJ472	1/4W 4.7K
R432	ERDS2TJ101	1/4W 100
R433	ERDS2TJ153	1/4W 15K
R434	ERDS2TJ393	1/4W 39K
R435	ERDS2TJ102	1/4W 1K
R436	ERDS2TJ223	1/4W 22K
R437	ERDS2TJ123	1/4W 12K
R438-441	ERDS2TJ103	1/4W 10K
R442	ERDS2TJ221	1/4W 220
R447-450	ERDS2TJ472	1/4W 4.7K
R451, 452	ERDS2TJ473	1/4W 47K
R471, 472	ERDS2TJ102	1/4W 1K
R473	ERDS2TJ273	1/4W 27K
R801-804	ERDS2TJ103	1/4W 10K
R805-808	ERDS2TJ273	1/4W 27K
R809-812	ERDS2TJ473	1/4W 47K
R813, 814	ERDS2TJ102	1/4W 1K
R815, 816	ERDS2TJ104	1/4W 100K
R817, 818	ERDS2TJ391	1/4W 390
R819, 820	ERDS2TJ103	1/4W 10K
R821, 822	ERDS2TJ123	1/4W 12K
R823, 824	ERDS2TJ562	1/4W 5.6K
R825, 826	ERDS2TJ471	1/4W 470

Ref. No.	Part No.	Values & Remarks
R827, 828	ERDS2TJ473	1/4W 47K
R829, 830	ERDS2TJ471	1/4W 470
R831-834	ERDS2TJ102	1/4W 1K
R835, 836	ERDS2TJ331	1/4W 330
R839, 840	ERDS2TJ221	1/4W 220
R851	ERDS2TJ472	1/4W 4.7K
R852	ERDS2TJ102	1/4W 1K
R853	ERDS2TJ471	1/4W 470
R854	ERDS2TJ472	1/4W 4.7K
R855	ERDS2TJ102	1/4W 1K
		CAPACITORS
C1-3	ECKT1H223ZF	50V 0.022U
C4	ECEA1CU332	16V 3300U
C5	ECEA1CU222	16V 2200U
C6	ECEA1JU470BV	63V 47U
C7-9	ECBT1E223ZF	25V 0.022U
C10, 11	ECEA1AU471	10V 470U
C12, 13	ECEA1AK101	10V 100U
C15	ECEA0JK221B	6.3V 220U
C20	ECFR1E104ZF5	25V 0.1U
C301	ECEA0JK101	6.3V 100U
C302	ECFR1E104ZF5	25V 0.1U
C303	ECBT1H6R8K5	50V 6.8P
C304	ECEA0JU331B	6.3V 330U
C305	ECFR1E104ZF5	25V 0.1U
C306	ECEA0JK101	6.3V 100U
C307	ECFR1E104ZF5	25V 0.1U
C330, 331	ECBT1H5R6K5	50V 5.6P
C351-353	ECBT1H102KB5	50V 1000P
C354	ECBT1E103ZF	25V 0.01U
C401	ECFR1E104ZF5	25V 0.1U
C402	ECEA0JK470	6.3V 47U
C405, 406	ECBT1E223ZF	25V 0.022U
C407	ECEA0JK101	6.3V 100U
C408, 409	ECFR1E104ZF5	25V 0.1U
C410	ECEA1HK010B	50V 1U
C414	ECBT1E223ZF	25V 0.022U
C430	ECFR1E104ZF5	25V 0.1U
C431	ECEA1HKN010B	50V 1U
C471, 472	ECBT1E103ZF	25V 0.01U
C801-804	ECBT1H680J5	50V 68P
C805-808	ECBT1H470J5	50V 47P
C809, 810	ECQM1H333JZ	50V 0.033U
C811, 812	ECQM1H102KF3	50V 1000P
C813, 814	ECBT1H101KB5	50V 100P
C815, 816	ECEA1AKN220B	10V 22U
C819, 820	ECBT1H471KB5	50V 470P

Ref. No.	Part No.	Values & Remarks
C821, 822	ECFR1E104ZF5	25V 0.1U
C823, 824	ECEA0JU331B	6.3V 330U
C825, 826	ECFR1E104ZF5	25V 0.1U
C827, 828	ECEA1AK101	10V 100U
C829	ECFR1E104ZF5	25V 0.1U
C851	ECEA1CK100B	16V 10U
C852	ECEA0JU102	6.3V 1000U
C1001	ECKWKC103PF2	400V 0.01U ⚠
		<SERVO P.C.B>
		RESISTORS
R101	ERDS2TJ471	1/4 470
R102	ERJ6GEYJ120V	1/10 12
R103	ERJ6GEYJ122	1/10 1.2K
R104	ERJ6GEYJ471	1/10 470
R105, 106	RRJ6GCJ102TE	1/6 1K
R108	ERJ6GEYJ224V	1/10 220K
R110	ERDS2TJ222	1/4 2.2K
R111	ERJ6GEYJ154V	1/10 150K
R113	ERJ6GEYJ472V	1/10 4.7K
R114	ERJ6GEYJ683V	1/10 68K
R116	ERJ6GEYJ332V	1/10 3.3K
R117	ERJ6GEYJ123	1/10 12K
R118	ERJ6GEYJ333V	1/10 33K
R119	RRJ6GCJ223TE	1/6 22K
R122	ERDS2TJ104	1/4 100K
R123	ERJ6GEYJ470V	1/10 47
R124	RRJ6GCJ103TE	1/6 10K
R125	RRJ6GCJ222TE	1/6 2.2K
R127	ERDS2TJ681	1/4 680
R128	RRJ6GCJ103TE	1/6 10K
		CAPACITORS
C101	ECEA1CKS220I	16V 22U
C102	ECEA1HKS010I	50V 1U
C103	ECEA1CKS220I	16V 22U
C106	RCUV1E104ZF	25V 0.1U
C107	ECEA0GKS101I	4V 100U
C108	ECEA0JKS470I	6.3V 47U
C109	ECEA1HKS010I	50V 1U
C110	RCUV1H681KB	50V 680P
C111	ECUV1C224KR	16V 0.22U
C112	RCUV1H331KB	50V 330P
C113	ECEA1HSN010I	50V 1U
C114	RCUV1E333KB	25V 0.033U
C115	ECEA1HSN010I	50V 1U

Ref. No.	Part No.	Values & Remarks
C116	RCUV1E333KB	25V 0.033U
C117	ECBT1H102KB5	50V 0.001U
C119, 120	ECEA1CKN4R7I	16V 4.7U
C122	ECEA0JKS220I	6.3V 22U
C123	RCUV1E104ZF	25V 0.1U
C124	ECUV1E823KB	25V 0.082U
C125	ECUV1C224KR	16V 0.22U
C127	ECEA0JKF101I	6.3V 100U

Ref. No.	Part No.	Values & Remarks
C128	ECEA1CKA101I	16V 100U
C132	ECUV1E104KB	25V 0.1U
C133	RCUV1H330KC	50V 33P
C134, 135	ECUV1C224KR	16V 0.22U
C136	ECEA0GKS101I	4V 100U
C138	RCUV1E104ZF	25V 0.1U
C139	RCUV1H470KC	50V 47P
C140	RCUV1E103KB	25V 0.01U

Ref. No.	Part No.	Values & Remarks
C141-144	RCUV1H470KC	50V 47U
C145	ECEA0JKF101I	6.3V 100U
C146	RCUV1H181KC	50V 180P
C147	RCUV1H472KB	50V0.0047U
C148	ECEA1ESN4R7I	25V 4.7U
C149	RCUV1E104ZF	25V 0.1U
C150	RCUV1E103KB	25V 0.01U

PACKING

(Parts list on page 45.)

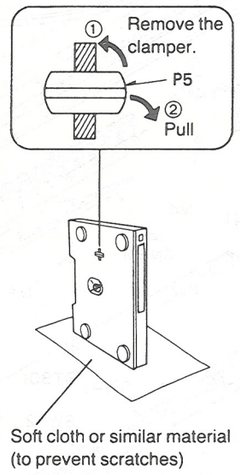

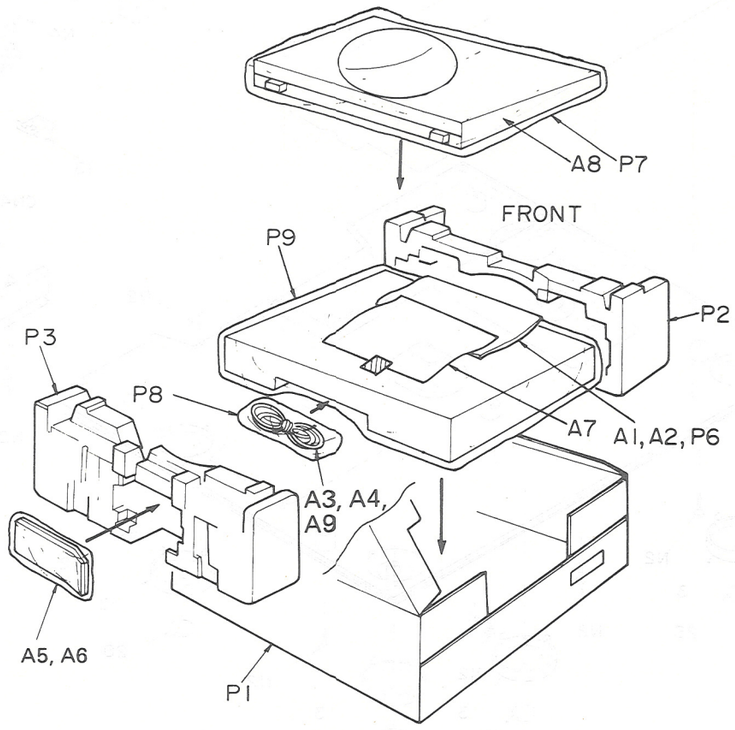

TROUBLESHOOTING FLOW CHART

PLAYBACK FLOW CHART

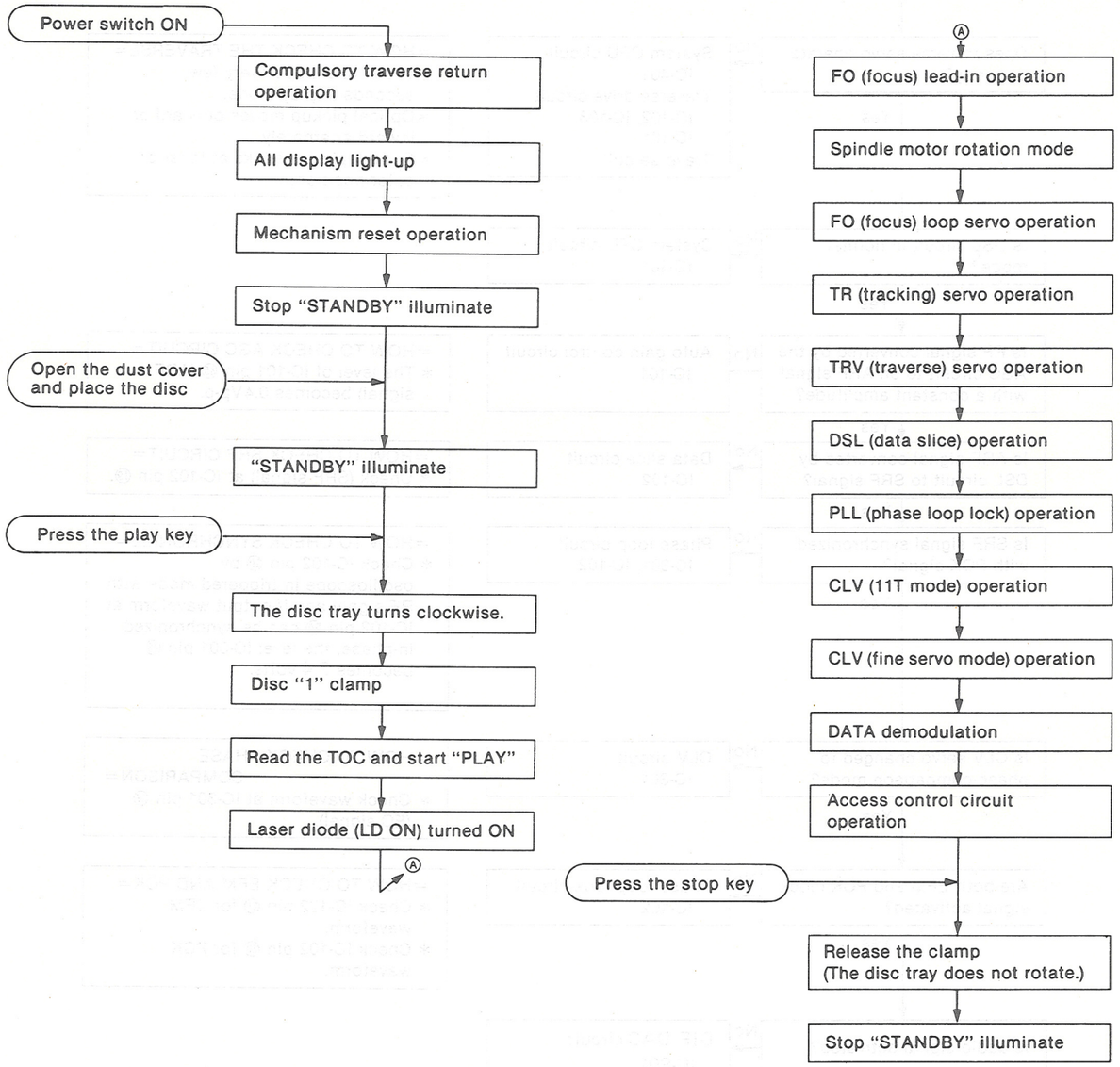

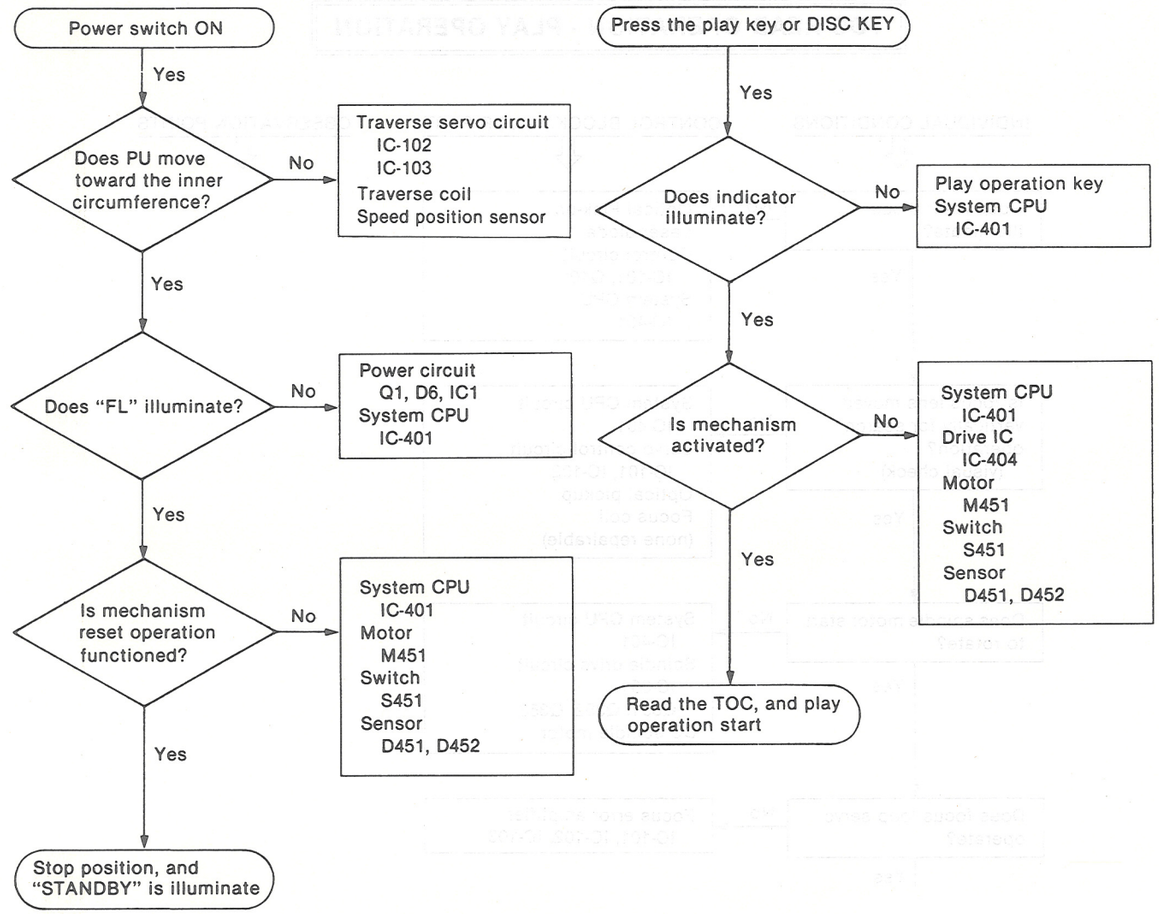

 SL-PC25

TOC READ OPERATION - PLAY OPERATION

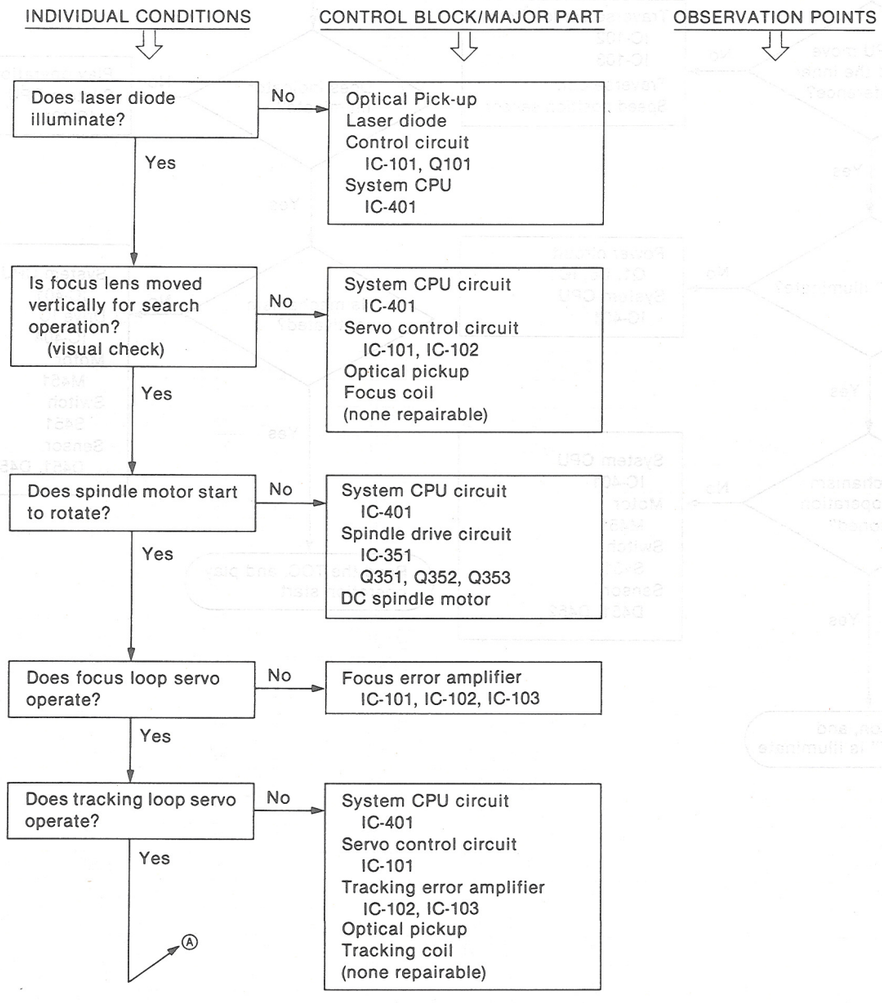

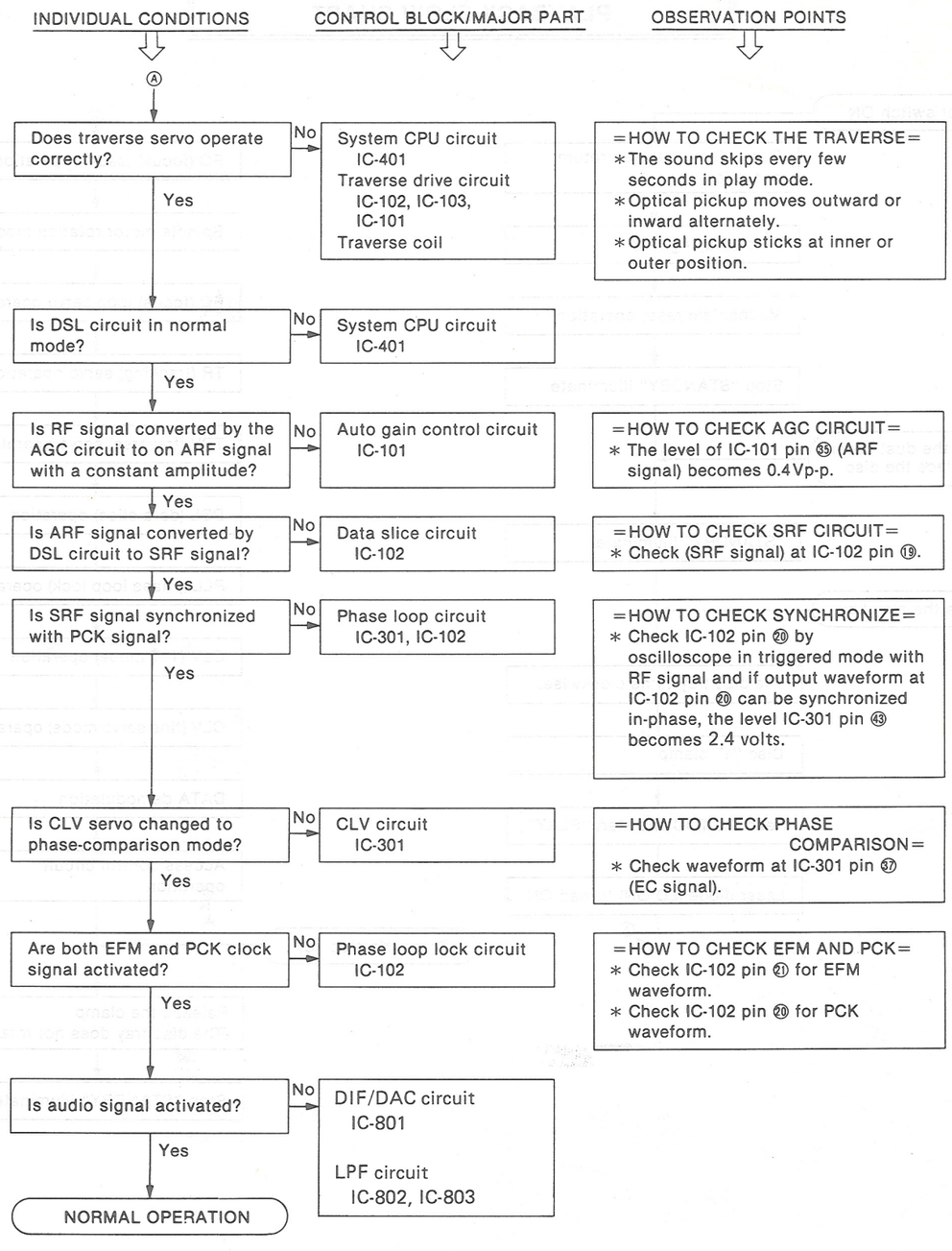

Printed in Japan
K900609500YY/TN